Electromen Motor Controllers

BONDY

INDUSTRIAL EQUIPMENT SUPPLIER

For ordering and questions call

(+45) 70 15 14 14

ELECTROMEN Oy



ELECTROMEN STOCK PRODUCTS

TECHNICAL SPECIFICATIONS AND USER´S MANUALS

2018/1



www.electromen.com

Standard – Modified – Customised Automation Electronics since 1988.
Electromen Oy Ltd, Vähäheikkiläntie 56 B, FI-20810 Turku, Finland Phone +358 2 469 3050 Telefax +358 2 469 3052
Email postmaster@electromen.com Website www.electromen.com

ELECTROMEN

Standard – Modified – Customised Automation Electronics since 1988

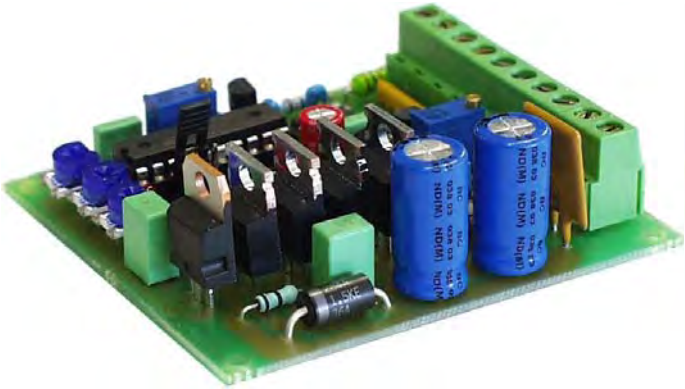

Electromen manufactures electronic devices for industrial environments and automation solutions.

Due to our long experience in industrial electronics engineering, Electromen designers have repeatedly come across the same requirements in signal isolation and conditioning, which is why Electromen has created a growing family of automation modules, that are ready to be delivered from stock.

The Electromen automation product family includes products for handling the most common problems and control tasks in industrial environment. Our stock products include:

1. Drivers/power controllers for DC motors, stepper motors, brushless DC motors, spindle motors, actuators as well as DC motor servo controllers.
2. Automation modules, galvanic isolators, signal conditioners.
3. Measuring and supervision devices.

These products are designed to be as versatile as economically reasonable.

ELECTROMEN STOCK PRODUCTS

GALVANIC ISOLATORS / SIGNAL CONDITIONERS

ELECTROMEN

EM-M11A MULTISCALE GALVANIC SIGNAL ISOLATOR AND CONDITIONER

FEATURES:

- Three way isolated
- Multiple operating ranges
- Two frequency ranges
- Dip-switch settable
- Isolation up to 1000 V
- Adjustable zero and gain
- Short circuit protected
- Rail mountable

EM-M11A is a multiscale conditioner and isolator module for the commonly used signals in automation. The range setting is easily done with DIP-switches and signal frequency limit can be set to 1 kHz or 20 Hz. Every partition (INPUT, OUTPUT, SUPPLY) is galvanically isolated up to 1000 V. Gain and Zero are easy to adjust and there is no mutual effect between these adjustments. The number of possible input/output signal combinations are up to 25 because any of the selectable input ranges can be combined with any of the output ranges.

TECHNICAL DATA:

Operating voltage	20...32 V
Current consumption	70 mA max
Linearity error	< 0.1 %
Thermal drift	< 50 ppm/°C
Output ranges	
0...1 V	RL > 1 kohm
0...5 V	RL > 1 kohm
0...10 V	RL > 1 kohm
0...20 mA	RL < 700 ohm
4...20 mA	RL < 700 ohm
Input ranges	
0...1 V	Rin 50 kohm
0...5 V	Rin 250 kohm
0...10 V	Rin 500 kohm
0...20 mA	Rin 50 ohm
4...20 mA	Rin 50 ohm
Frequency response	0...1 kHz
	0...20 Hz
Adjust ranges	gain ± 20 %
	zero ± 20 %
Isolation voltage	1000 V
Oper. ambient temp.	0...60 °C

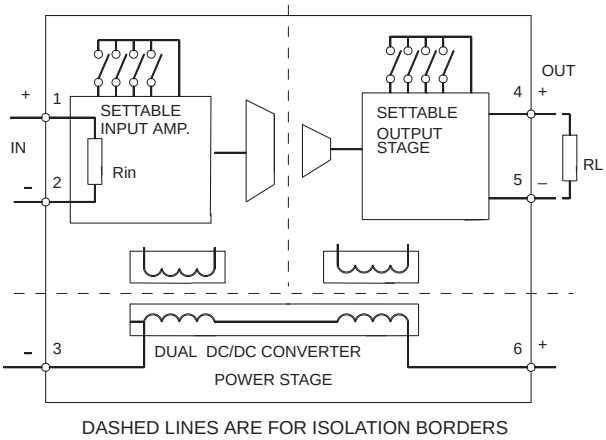

DASHED LINES ARE FOR ISOLATION BORDERS

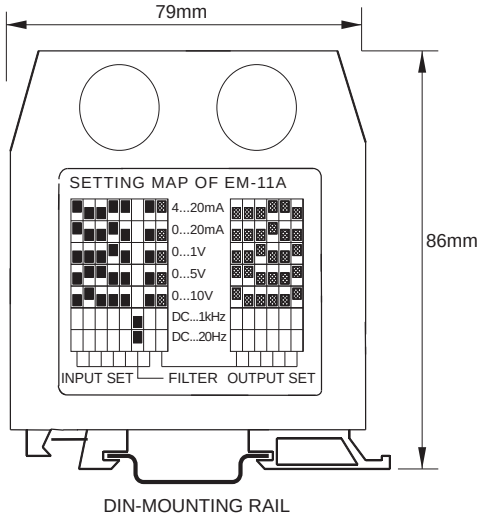

DIN-MOUNTING RAIL
WIDTH OF THE HOUSING IS 25mm

ELECTROMEN Oy Vähäheikkiläntie 56B, 20810 Turku, FINLAND Tel. +358-2-4693050 Fax. +358-2-4693052

EM-M14 LOOP POWERED 4...20 mA GALVANIC ISOLATOR

FEATURES:

- No supply required
- Operation range 0...25 mA
- Isolation up to 2000 V
- Low voltage drop
- Over current protected
- Over voltage protected
- Incorrect polarity protected
- Wide input voltage range
- Rail mountable

EM-M14 is an easy way to isolate current loop signals obtaining a good accuracy. No additional supply voltage is required. Voltage drop is minimal although the input voltage range is very wide. EM-M14 isolator is effectively protected against misconnections, over voltages and over currents. Output current can also be converted to a voltage signal with the inbuilt 100 ohm resistor. NOTE: As an additional feature the EM-M14 module can also be used to isolate loop powered transducers.

TECHNICAL DATA:

Operating range	4...20 mA (0...25 mA)
Voltage drop	< 4 V at 20 mA
Linearity error	< 0.1 %
Thermal drift	< 50 ppm/°C
Loading error	< -0.05 % / 100 ohm
Load (RL)	0...500 ohm
Input voltage range	4...27 V
Input voltage limit	30 V
Over current limit	50 mA
Frequency response	0...30 Hz
Settling time	30 ms
Oper. ambient temp.	-10...60 °C

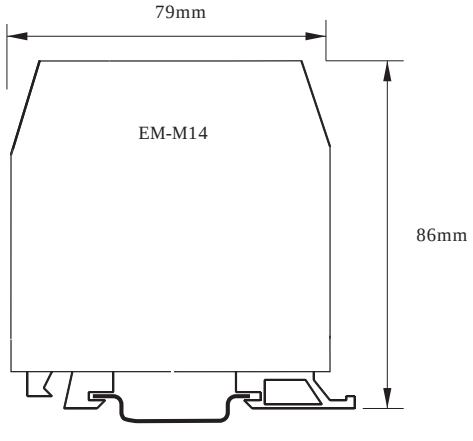

EM-M14 AND I/I ISOLATION

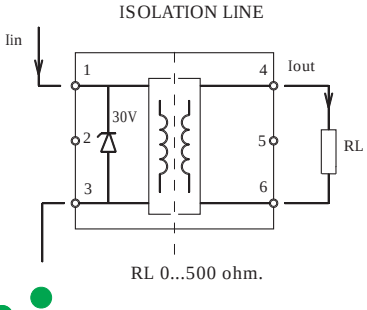

EM-M14 AND I/U ISOLATION

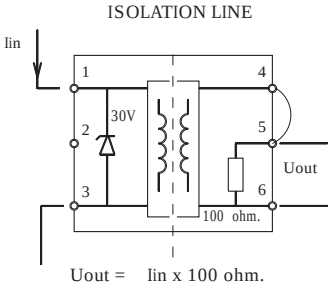

EM-M14 AND TRANSDUCER ISOLATION

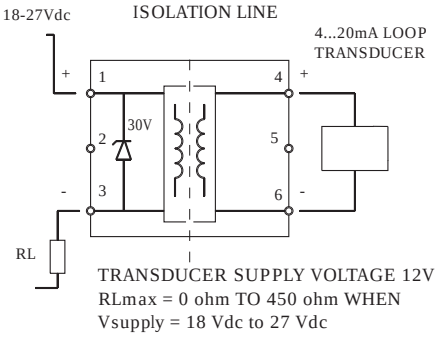

ELECTROMEN Oy Vähäheikkiläntie 56B, 20810 Turku, FINLAND Tel. +358-2-4693050 Fax. +358-2-4693052

EM-M17b F/UI -CONVERTER

FEATURES:

- Eight frequency ranges
- Isolated input
- High linearity
- Various input options
- Output signal mA or V
- Good output filtering
- Output short circuit protected
- Adjustable zero & gain
- Rail mountable

EM-M17b converts applied frequency to 0...10 V or to 4...20 mA signal. Frequency range is selectable with DIP-switches. Converter can be used with most of the commonly available transducer types. Frequency can be applied also as a pulsed voltage signal. The frequency input can be isolated optically if transducer supply and SW1/1 is left open. Converted signal is filtered using a 2nd order filter so that the ripple of the incoming frequency is efficiently attenuated. The output of EM-M17b is both short circuit and overload protected. Operating voltage range is wide and the supply is protected against incorrect polarity.

TECHNICAL DATA:

Operating voltage	20...32 Vdc
Current consumption	50 mA max.
Linearity error	0.1 % typical
Thermal drift	< 100 ppm/°C
Transducer supply	15 Vdc
	8.5 Vdc (namur)
Input settings	open collector NPN
	open collector PNP
	NAMUR
	pulse (isolated)
Input range	4...25 V
Input impedance	appr. 2 kohm
Frequency ranges	0...200, 500, 1000 Hz
	0...2, 5, 10, 20, 50 kHz
Output filtering	10 Hz (-3 dB)
Output ranges	0...10 V RL > 1 kohm
	4...20 mA RL < 500 ohm
Adjustment ranges	Gain ± 15 %
	Zero - 25 %
Oper. ambient temp.	0...60 °C

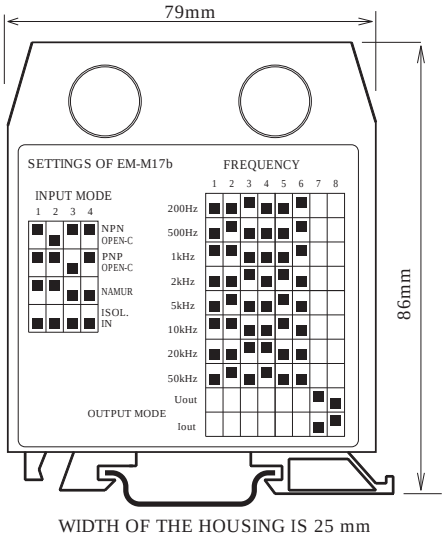

WIDTH OF THE HOUSING IS 25 mm

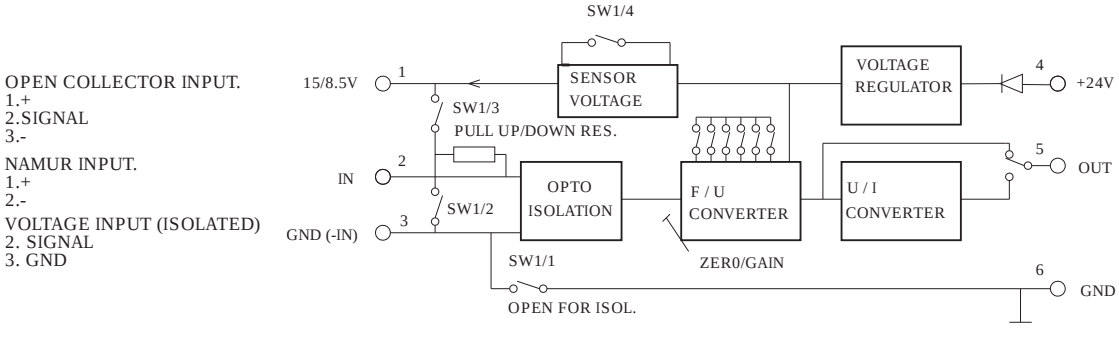

ELECTROMEN Oy Vähäheikkiläntie 56B, 20810 Turku, FINLAND Tel. +358-2-4693050 Fax. +358-2-4693052

EM-M19 POTENTIOMETER CONVERTER

FEATURES:

- Five different output signals
- Supply isolated from signal
- Regulated potentiometer supply
- For potentiometers 1 ... 47 kohm
- Adjustable zero and gain
- Short circuit protected output
- Rail mountable

EM-M19 supplies a regulated voltage for potentiometer. The voltage signal from the potentiometer is filtered and amplified. The output range may be selected from five different alternatives. Output signal is easily set with DIL-switches. The supply is galvanically isolated from the output signal. This permits flexible installation to different systems. The output stage is short circuit protected. Operating voltage inputs are protected against incorrect polarity.

TECHNICAL DATA:

Supply	18...32 Vdc
Current consumption	50 mA max.
Linearity error	< 0.2 %
Thermal drift	< 100 ppm/°C
Potentiometer	1...47 kohm
Pot.meter supply	5 Vdc (10 mA max.)
Frequency range	DC...10 Hz (1000 Hz opt.)
Output ranges	4...20 mA (RL 0...500 ohm)
	0 ... 10 V (RL > 1 kohm)
	0...5 V (RL > 1 kohm)
	-10...10 V (RL > 1 kohm)
	-5...5 V (RL > 1 kohm)
Adjust ranges	Gain ± 30 %
	Zero 50 %
Isolation voltage	500 V
Oper. ambient temp.	0...50 °C

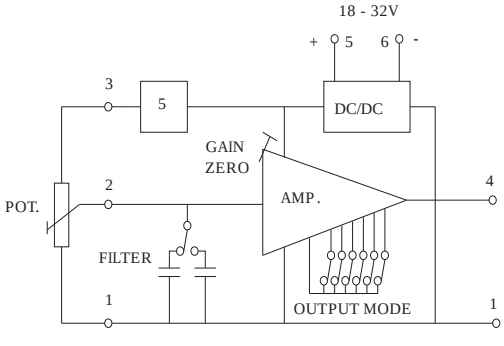

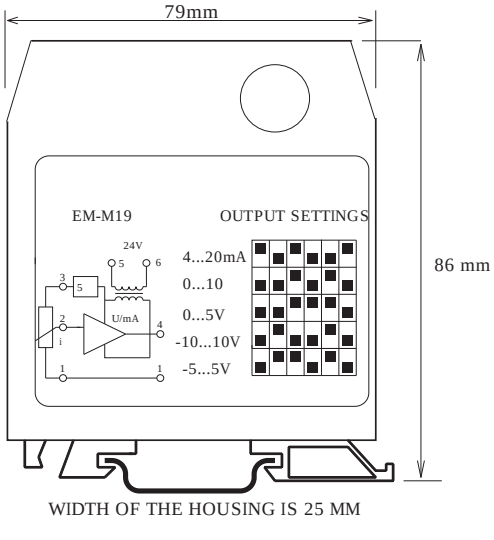

ELECTROMEN Oy Vähäheikkiläntie 56B, 20810 Turku, FINLAND Tel. +358-2-4693050 Fax. +358-2-4693052

EM-M20 POTENTIOMETER CONVERTER FOR 4...20 mA CURRENT LOOP

FEATURES:

- Wide operating voltage range
- Operates in current loop
- Selectable filtering
- Adjustable zero and gain
- Over voltage protected
- Incorrect polarity protected
- Easy to connect
- Rail mountable

EM-M20 converts the position information of a potentiometer to milliampere signal (4...20 mA). Converter acquires its operating voltage from the current loop and needs no additional supply. Adjustments have no mutual effect. This makes the adjusting more easy and faster. The filtering can be selected from four alternatives to be suitable for different applications. Versatile protection circuits protect the converter from interfering peaks, over voltage and incorrect connections.

TECHNICAL DATA:

Supply	12...32 Vdc
Output range	4...25 mA
Linearity error	< 0.1 %
Thermal drift	< 50 ppm/°C
Current loop resistor	0...800 ohm
Potentiometer	> 1 kohm
Usable potentiometer	1...10 kohm
High frequency limit	1, 10, 100, 1000 Hz
Oper. ambient temp.	0...60 °C

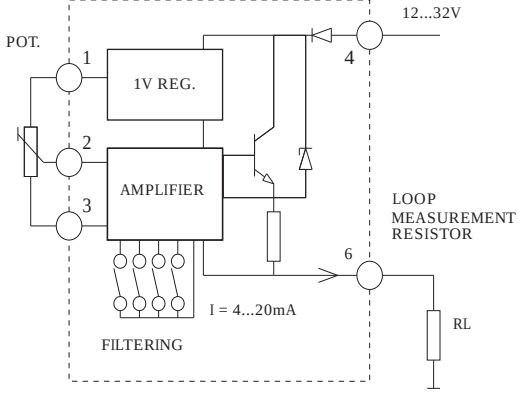

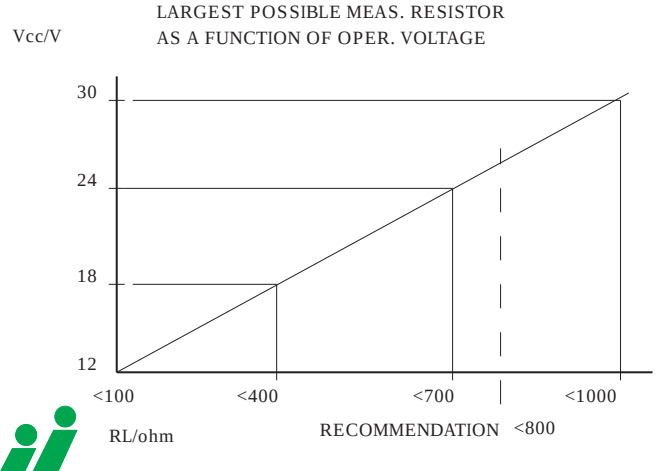

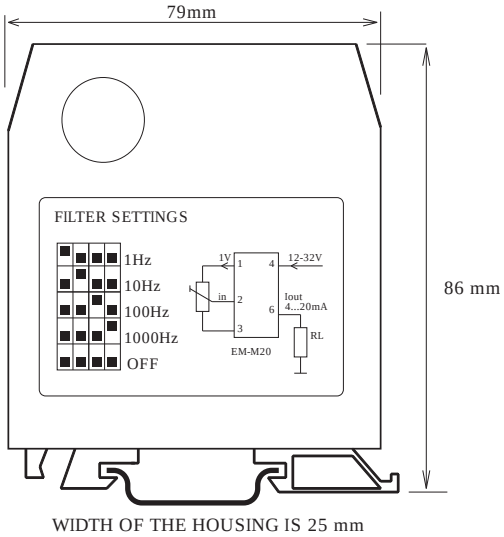

ELECTROMEN Oy Vähäheikkiläntie 56B, 20810 Turku, FINLAND Tel. +358-2-4693050 Fax. +358-2-4693052

EM-M21A Pt-100 TO 4...20 mA CURRENT LOOP CONVERTER

FEATURES:

- Wide operating voltage range
- 4...20 mA / 1...5 V output
- Multiple ranges
- Three wire compensated
- Linearisation inbuilt
- Adjustable zero and gain
- Over voltage protected
- Incorrect polarity protected
- Easy to connect
- Rail mountable

EM-M21A is a multiscale converter for thermal transducer Pt-100. Pt-100 transducer is connected to converter with three wires. In this way the cable resistance is compensated. The converter has four selectable temperature ranges and a -50 °C settable offset. The gain and zero adjustments have no mutual effect. The output signal is 4...20 mA current signal, and the unlinearity of the Pt-100 is already corrected in the converter. The converter acquires its operating voltage from the current loop and needs no additional supply. EM-M21A can be connected as a voltage transmitter 1...5 V according to the figure below. Converter is efficiently protected against misconnections and voltage surges.

TECHNICAL DATA:

Supply	12...32 Vdc
Temperature ranges	0...100 °C
	0...200 °C
	0...300 °C
	0...400 °C
	-50...+50 °C
	-50...+150 °C
	-50...+250 °C
	-50...+350 °C
Output signal	4...20 mA / 1...5 V
Linearity error	< 0.1 %
Thermal drift	< 100 ppm/°C
Cable compensation	0.1 %/ 10 ohm (Rc<50 ohm)
Transducer supply	appr. 1 mA
Loop resistance	0...700 ohm (24 V)
Oper. ambient temp.	0...60 °C

LARGEST POSSIBLE MEAS. RESISTOR
AS A FUNCTION OF OPER.VOLTAGE

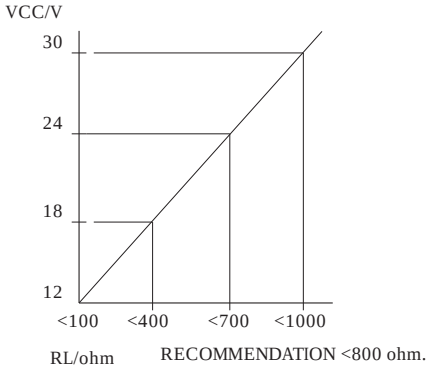

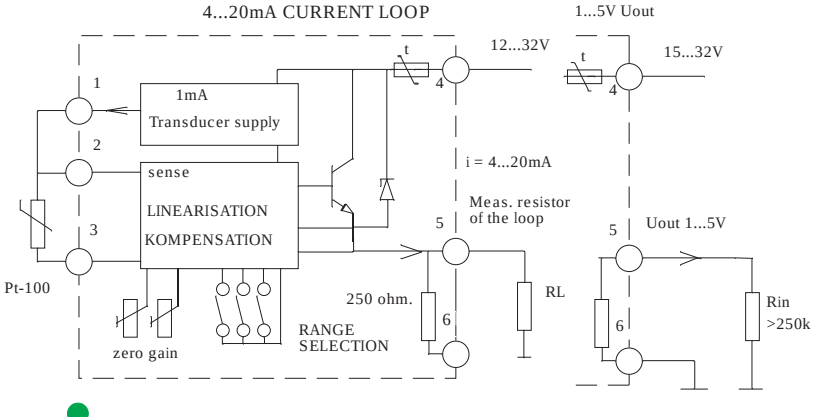

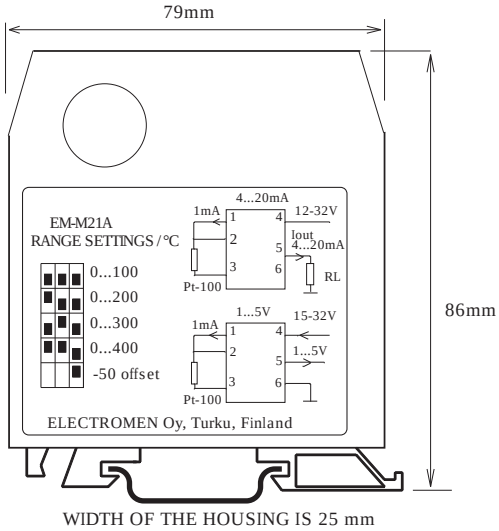

WIDTH OF THE HOUSING IS 25 mm

ELECTROMEN Oy Vähäheikkiläntie 56B, 20810 Turku, FINLAND Tel. +358-2-4693050 Fax. +358-2-4693052

EM-M22 TRMS 5A / 1A TO 4...20mA

FEATURES

- **Measures TrueRMS**
- **Input ranges 5A and 1A**
- **Output 4...20mA and 1...5V**
- **Settable gain**
- **Over current protected**
- **Reverse current protected**
- **Easy to connect**
- **Rail mountable**

EM-M22 is designed for measuring AC current. The device was designed to work with current transformer and as a converter to current signal. The AC current is measured as TrueRMS, in other words the device gives RMS output also from other than sinus shaped signals. The measured current is converted into 4...20mA signal. There are two measuring ranges, 5A and 1A, which are standard current transformer output values. The device takes it's supply power from current loop and requires no other power supply. The device can also be used as 1...5V signal transducer according to the schematic down low. EM-M22 is efficiently protected from faulty connections and voltage peaks.

TECHNICAL DATA

Supply	12...32 Vdc
Measuring range	5AC RMS 20A peak
	1AC RMS 4A peak
Input impedance	0.05 ohm / 5A
	0.27 ohm / 1A
Output signal	4...20mA / 1...5V
Linearity error	<0.5% (sin)
Thermal drift	<200ppm/°C
Settling time	0.3s
Frequency range	45...1000Hz
Loop resistance	0-700 ohm (24V)
Oper. ambient temp.	0...50°C

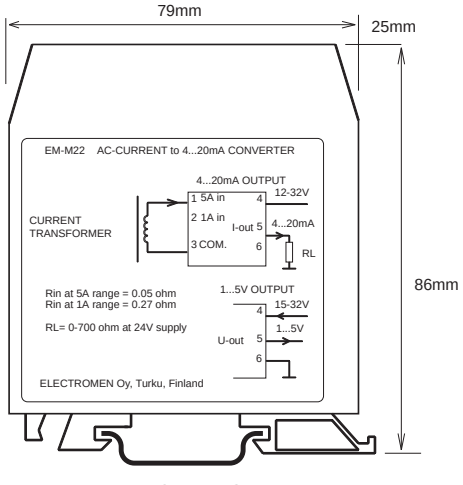

DIN-MOUNTING RAIL
WIDTH OF THE HOUSING IS 25MM

4...20mA CURRENT LOOP

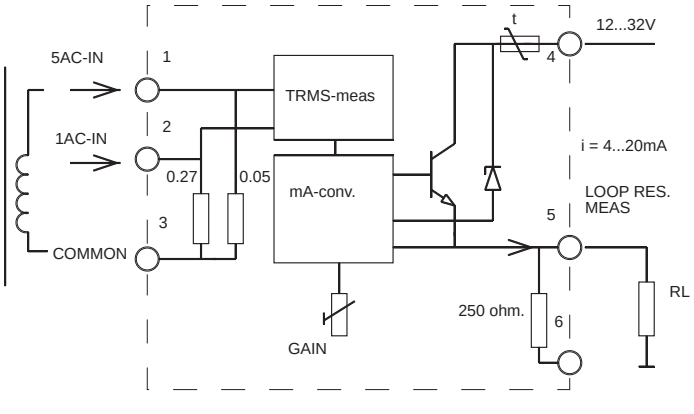

1...5V Uout

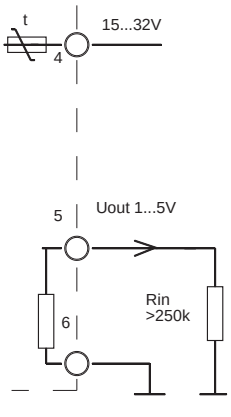

LARGEST POSSIBLE MEAS. RESISTOR
AS A FUNCTION OF OPER. VOLTAGE

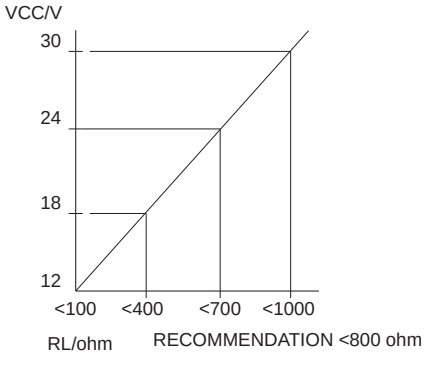

ELECTROMEN Oy Vähäheikkiläntie 56B, 20810 Turku, FINLAND Tel. +358-2-4693050 Fax. +358-2-4693052

EM-M24 MULTISCALE GALVANIC ISOLATOR ALSO FOR BIPOLAR SIGNALS

FEATURES:

- Three way isolated
- Multiple operating ranges
- Also for bibolar signals
- DIP-switch settable ranges
- Two frequency ranges
- Adjustable zero and gain
- Isolation voltage 1000 V
- Short-circuit protected
- Rail mountable

EM-M24 conditioning amplifier provides complete galvanic isolation between input, output and supply. Frequency ranges are DIP-switch settable. Input and output ranges can be selected individually. Input filtering can be selected from two alternatives. The effect of zero and gain adjustments is ± 15 % of the selected range. Zero and gain adjustments have no mutual effect. The output of the amplifier is short-circuit protected and the operating voltage input is protected against incorrect polarity.

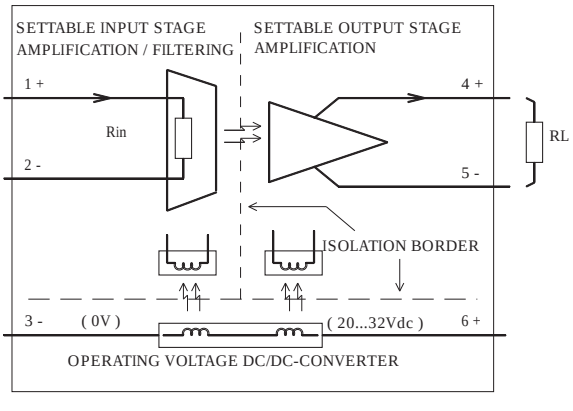

TECHNICAL DATA:

Supply	20...32 Vdc	
Current requirement	60 mA max.	
Linearity error	< 0.1 %	
Thermal drift	< 60 ppm/°C	
Signal ranges	Rin	RL
-10...+10 V	1 Mohm	> 1 kohm
0...+10 V	500 kohm	> 1 kohm
-5...+5 V	500 kohm	> 1 kohm
-1...+1 V	100 kohm	> 1 kohm
0...+1 V	50 kohm	> 1 kohm
-20...+20 mA	50 ohm	< 500 ohm
0...+20 mA	50 ohm	< 500 ohm
4...+20 mA	50 ohm	< 500 ohm
Frequency ranges	10/500 Hz -3 dB	
Adjust ranges	gain ± 15 %	
	zero ± 15 %	
Isolation voltage	1000 V	
Oper. ambient temp.	0...50 °C	

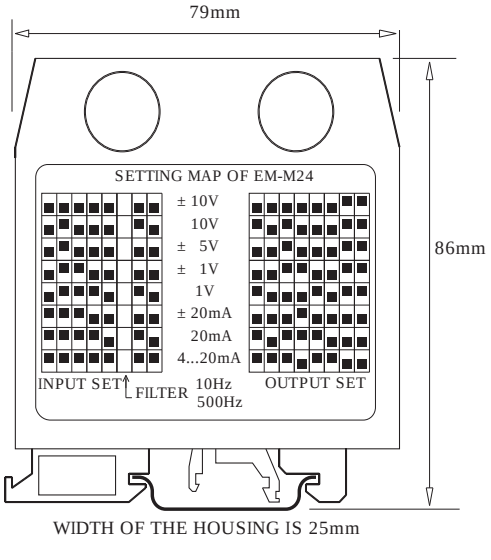

ELECTROMEN Oy Vähäheikkiläntie 56B, 20810 Turku, FINLAND Tel. +358-2-4693050 Fax. +358-2-4693052

EM-M25 TRMS 0...400 Vac TO 4...20mA

FEATURES

- Measures TrueRMS
- Input ranges 145, 230 and 400 Vac
- Output 4...20mA and 1...5V
- Settable gain
- Over current protected
- Switched polarity current protected
- Easy to connect
- Rail mountable

EM-M25 is designed for measuring AC voltage. The device was designed for measuring mains voltage and as a converter to current signal. The AC voltage is measured as TrueRMS, in other words the device gives RMS output also from other than sin-based signals. The measured voltage is converted into 4...20mA signal. The devices primary and secondary is galvanically isolated. The device takes its supply power from current loop and requires no other power supply. The device can also be used as 1...5V signal transducer according to the schematic down low. EM-M25 is also efficiently protected from faulty connections and voltage peaks.

TECHNICAL DATA

Supply	12...32 Vdc
Measuring range	0...145Vac (1& 2 wired)
	0...230Vac
	0...400Vac
Output signal	4...20mA / 1...5V
Linearity error	<2% (sin)
Thermal drift	<200ppm/°C
Settling time	0.3s
Frequency range	45...1000Hz
Adjust range	-30...+20%
Isolation	1500Vac
Loop resistance	0-700 ohm (24V)
Oper. ambient temp.	0...60°C

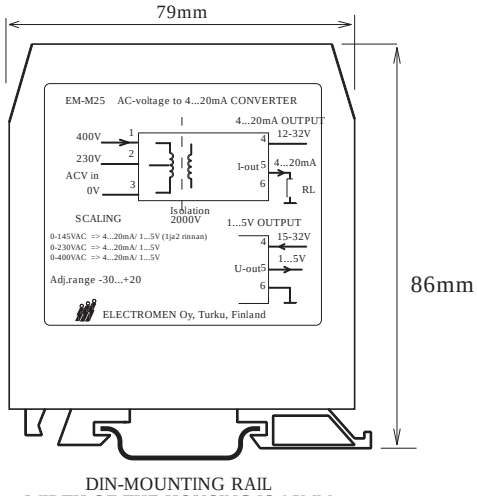

DIN-MOUNTING RAIL
WIDTH OF THE HOUSING IS 25MM

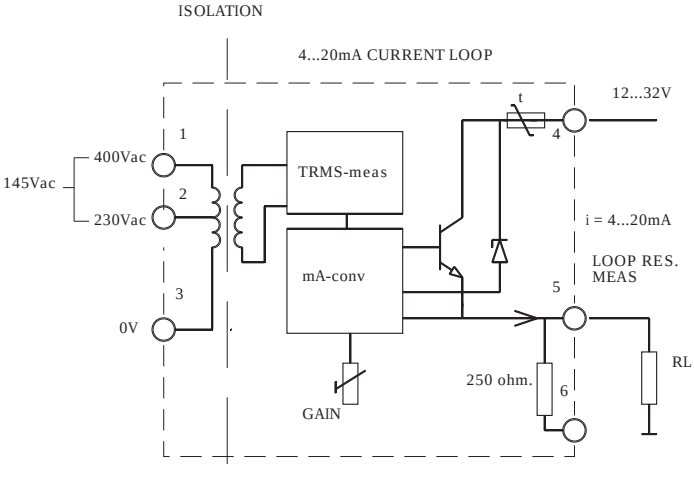

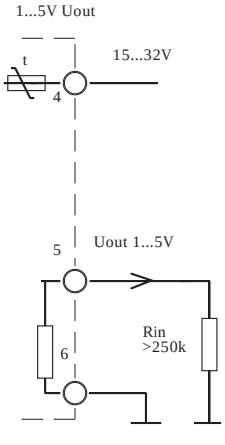

LARGEST POSSIBLE MEAS. RESISTOR AS A FUNCTION OF OPER. VOLTAGE

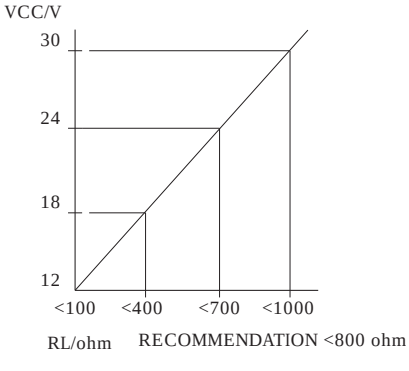

ELECTROMEN Oy Vähäheikkiläntie 56B, 20810 Turku, FINLAND Tel. +358-2-4693050 Fax. +358-2-4693052

EM-M26 TRIP AMPLIFIER FOR AUTOMATION SIGNALS

FEATURES:

- Wide operating voltage range
- Multiple input ranges
- Trip and hysteresis adjusts
- Adjustable on- and off-delay
- Isolated supply voltage
- Relay output with co-contacts
- Over voltage protected
- Incorrect polarity protected
- Easy to connect
- Rail mountable

EM-M26 is designed to control the standard signals in automation systems. Input range is selected with DIP-switches. Trip value and hysteresis are set with user accessible adjusts. Adjusts and scale are located on top of the unit. In addition the on- and off-delays are adjustable. The relay output can be set with DIP-switch to work either in “greater than” or in “smaller than” mode. Led indicates when the relay output is activated. Output is a potential free co-contact. For indication purposes module has a status voltage output. Status output is not affected by the delay settings. The supply voltage is isolated from output signal. Input of the unit is protected against over voltage. The supply input is protected against mis-connections.

TECHNICAL DATA:

Supply	15...30 Vdc
Current consumption	max. 60 mA
Input ranges	0 ... 10 V (1 Mohm)
	0 ... 5 V (1 Mohm)
	0 ... 1 V (1 Mohm)
	0 ... 20 mA (50 ohm)
Border adjust	0 ... 110 %
Hysteresis	0 ... 10 %
On/off delays	0 ... 10 s
Relay contact	1A 30 Vdc / 0.5A 120 Vac
Status output	0 V or 12 V (2.2 kohm)
Isolation voltage	500 V
Oper. ambient temp.	0...60 °C

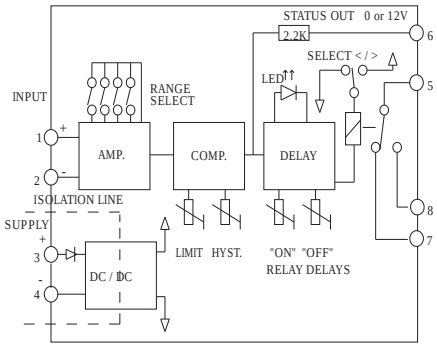

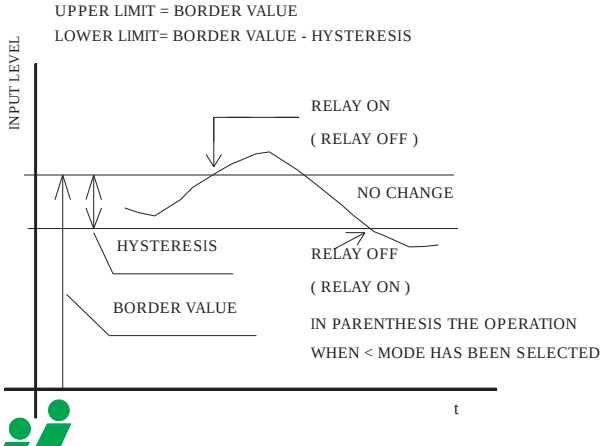

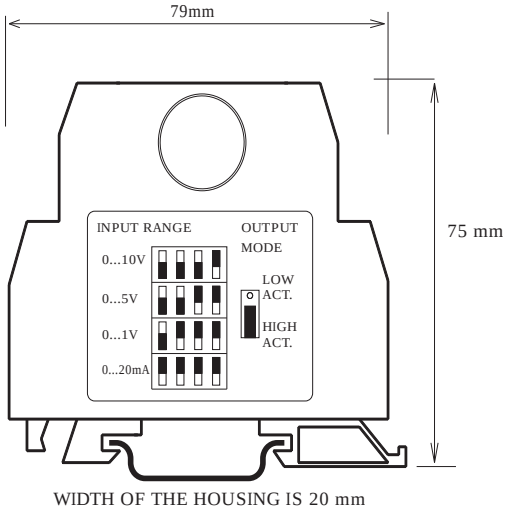

ELECTROMEN Oy Vähäheikkiläntie 56B, 20810 Turku, FINLAND Tel. +358-2-4693050 Fax. +358-2-4693052

EM-M40 8-CHANNEL ALARM INDICATION UNIT

FEATURES:

- 8-channels
- Selectable input mode n.o- or n.c-alarm contacts
- Four alternative alarm delays
- Relay output for alarm
- Blinker and memory for alarm
- Realtime indication
- Invertable outputs
- Test function
- Each output protected against short circuit
- Protected against inverse polarity

EM-M40 is an 8-channel alarm logic suitable for alarm control in various automation processes. With EM-M40 alarm panels and systems can be build easily. Each of the 8-channels can be set to activate either with opening or closing contact. Similarly inputs can be controlled with voltage signal also. The indication output display the state of the input in realtime so the unit is s.c. transparent. Indication outputs can be inverted as well, then the output is reversed compared to input. Indication outputs can control signal lamps, leds or relays. The alarm logic operates in following manner. When the fault signal is detected, the indication light of the particular channel starts to blink and group alarm relay and alarm output gives an alarm. If the fault causing the alarm is removed the alarm stays. The alarm can be removed only with the reset button. When the alarm is acknowledged the group alarm is removed, indication light stays lit until the input situation has been normalized. So alarm blinks and old one stays lit. The alarm input can be delayed for 0.5 to 4 seconds. The alarm delay is same for all channels.
With test input the operation of the unit can be verified, relay output can be excluded from the test. There are 3 alarm outputs: NPN-open-collector, inverted NPN-open-collector and relay outputs. The group-alarm relay is de-energized when alarm occurs so an operating voltage failure causes an alarm as well. All NPN transistor outputs are protected against short circuits and overloading. Protection recovers automatically when the fault is removed. Operating voltage input is protected against voltage surges and inversed voltage.

TECHNICAL DATA:

Supply	12...32 Vdc
Current consumption	100 mA
Input levels	“0” < 1 V “1” > 4 V
Input voltages	max. ±35 V
Input impedances	4.7 kohm (in 1-8)
Relay output	1 A 125 Vac / 30 Vdc
Transistor output	NPN-open collector
Load capacity of output	100 mA
Overcurrent protection	typ. 120 mA
Alarm delays	0.5 s, 1 s, 2 s, or 4 s
Oper. ambient temp.	0...50 °C
Dimensions	78*112*45 mm
EMC-tested and CE-marked	

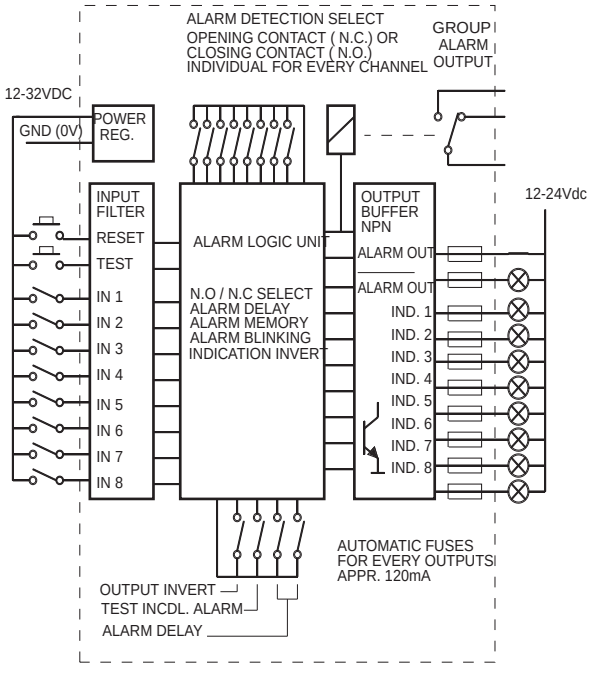

CONNECTION EXAMPLE OF ALARM LOGIC UNIT EM-M40

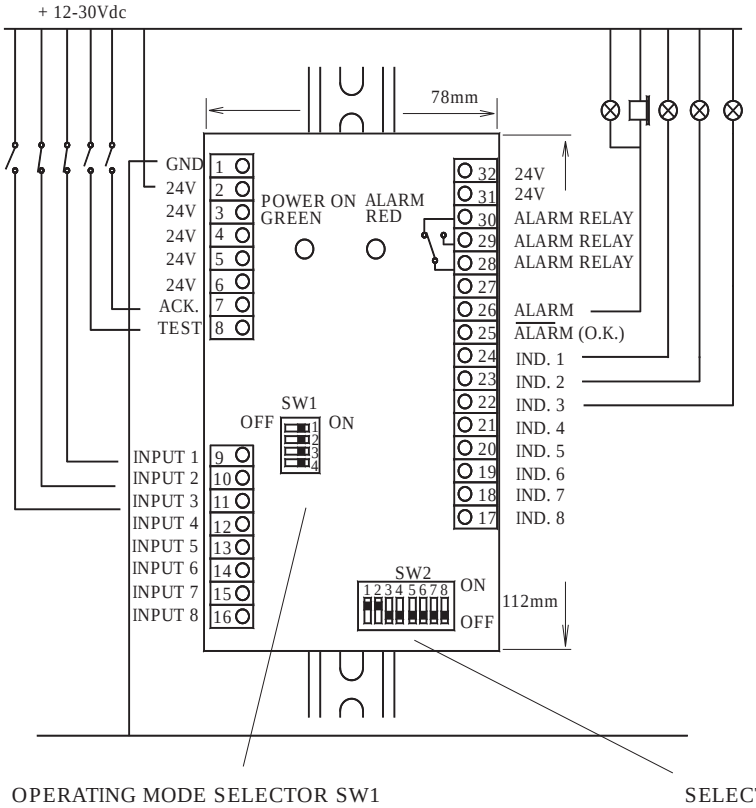

OPERATING MODE SELECTOR SW1

INVERTING OF THE OUTPUT SW1/1
- Direct operation: Fault activates output, switch “ON”
- Inverting operation: Normal condition activates output, switch “OFF”

OPERATING MODE OF THE TEST SW1/2
- Test activates indications and alarm, switch “OFF”
- Test activates only indications, switch “ON”

ALARM DELAY SW1/3&4
0.5 s switch 3 “ON” & switch 4 “ON”
1.0 s switch 3 “ON” & switch 4 “OFF”
2.0 s switch 3 “OFF” & switch 4 “ON”
4.0 s switch 3 “OFF” & switch 4 “OFF”

SELECTION OF THE ALARM OPERATION SW2

Opening contact causes an alarm (Uin < 1.5V), switch “ON”
Closing contact causes an alarm (Uin > 4 V), switch “OFF”

NOTICE !
IF INPUT IS NOT USED, SET THE SWITCH “OFF”
TEST AND ACKNOWLEDGEMENT ARE ACTIVATED WITH CLOSING CONTACT.

ALL INPUTS:
Input impedance 4.7 k

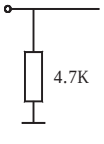

ALL OUTPUS
NPN-open collector
Load capacity 100 mA
Output protected with self-recovering PTC-fuse (appr. 120 mA)

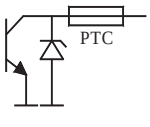

ELECTROMEN Oy Vähäheikkiläntie 56B, 20810 Turku, FINLAND Tel. +358-2-4693050 Fax. +358-2-4693052

EM-M40H 8-CHANNEL ALARM INDICATION UNIT

FEATURES:

- 8-channels
- Selectable input mode n.o- or n.c- alarm contacts
- Four alternative alarm delays
- Relay output for alarm
- Blinker and memory for alarm
- Realtime indication
- Invertable outputs
- Test function
- Each output protected against short circuit
- Protected against inverse polarity

EM-M40H is an 8-channel alarm logic suitable for alarm control in various automation processes. With EM-M40H the alarm panels and systems can be build easily. Each of the 8 channels can be set to be active either on opening or closing contact. Similarly the inputs can be controlled with voltage signal. The indication output displays the state of the input in realtime which means that the unit is transparent. The indication outputs can be inverted as well, in that case the output is reversed compared to input. The indication outputs can control signal lamps, leds or relays.

The alarm logic operates in following manner: Once the fault signal is detected, the indication light of the particular channel starts to blink and the group alarm relay and the alarm output give an alarm. If the fault causing the alarm is removed the alarm stays. The alarm can be removed only with the reset button. When the alarm is acknowledged the group alarm is removed and the indication light stays lit until the input situation has been normalized. (The new alarm blinks and the acknowledged alarm stays lit.) The alarm input can be delayed for 1 - 8 seconds and respectively the alarm relay output for 0 - 15 seconds. These delays are the same for all channels.

The operation of the unit can be verified with the test input. Relay output can be excluded from the test. There are 3 types of alarm outputs: NPN-open-collector, inverted NPN-open-collector and relay outputs. The group alarm relay is de-energized when alarm occurs so that an operating voltage failure causes an alarm as well. All NPN- transistor outputs are protected against short circuits and overloading. Protection recovers automatically when the short circuit is removed. The operating voltage input is protected against voltage surges and inversed voltage.

TECHNICAL DATA:

Supply	12...32 Vdc
Current consumption	100 mA
Input levels	“0” < 1 V “1” > 4 V
Input voltages	max. ±35 V
Input impedances	4.7 kohm (in 1-8)
Relay output	1 A 125 Vac / 30 Vdc
Transistor output	NPN-open collector
Load capacity of output	100 mA (Uout < 1 V)
Overcurrent protection	typ. 120 mA
Input delay	1 - 8s
Relay output delay	0 - 15s
Oper. ambient temp.	0...50 °C
Dimensions of housing	97*133*35,5mm

EMC-tested and CE-marked

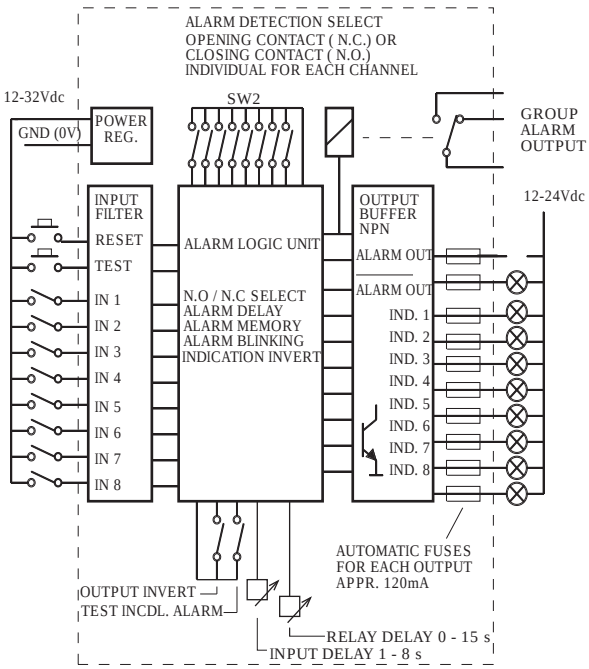

EM-M40H 8-CHANNEL ALARM CONTROL UNIT

CONNECTION EXAMPLE OF ALARM LOGIC UNIT EM-M40H

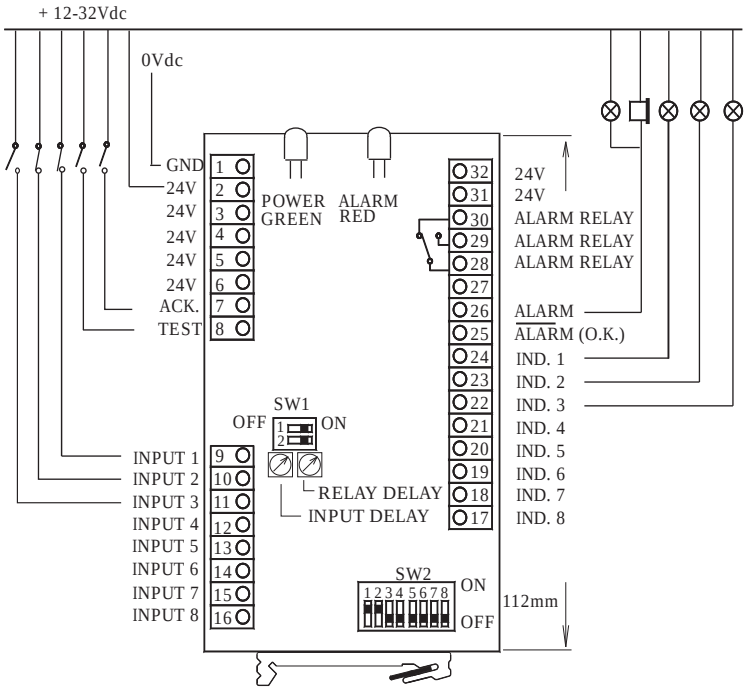

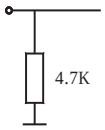

ALL INPUTS:
Input impedance 4.7 k

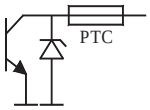

ALL OUTPUTS:
NPN-open collector
Load capacity 100 mA
Output protected with
self-recovering PTC-fuse
(appr. 120 mA)

SELECTION OF THE INPUT MODE SW2

Opening contact causes an alarm (Uin < 1.0V), switch “ON”
Closing contact causes an alarm (Uin > 4 V), switch “OFF”

NOTICE !

1) IF INPUT IS NOT USED, SET THE RESPECTIVE SWITCH (SW2) ON “OFF”-POSITION

2) TEST AND ACKNOWLEDGEMENT ARE ACTIVATED WITH CLOSING CONTACT.

OPERATING MODE SELECTOR SW1

OPERATING DIRECTION OF THE OUTPUT (SW1/1)
- Direct operation: Alarm activates output, switch “ON”
- Inverting operation: Normal condition activates output, switch “OFF”

OPERATING MODE OF THE TEST (SW1/2)
- Test activates indications and the alarm relay, switch “OFF”
- Test activates only indications, switch “ON”

MOUNTING

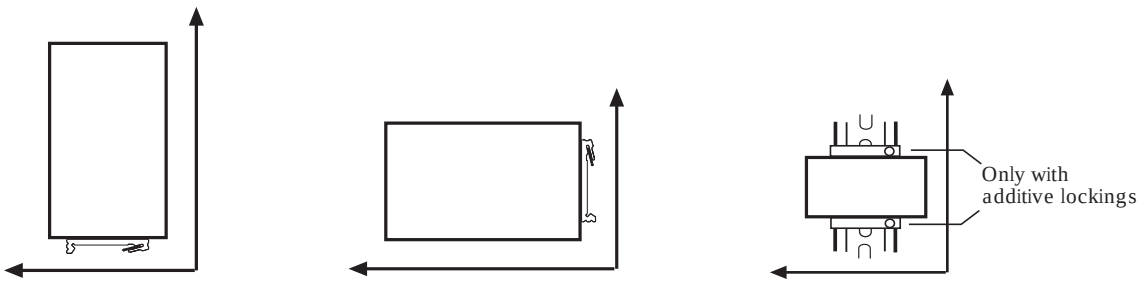

ELECTROMEN Oy Vähäheikkiläntie 56B, 20810 Turku, FINLAND Tel. +358-2-4693050 Fax. +358-2-4693052

ELECTROMEN

Electromen Oy Ltd
Vähäheikkiläntie 56 B, Fi-20810 Turku, Finland
Phone +358 2 469 3050, Telefax +358 2 469 3052
Email postmaster@electromen.com, Website www.electromen.com

EM-M41 & EM-M41-2 INPUT ISOLATOR FOR PLCs AND CONTROL SYSTEMS, FROM I TO I

FEATURES:

- Wide supply range
- Isolation voltage 1500 V
- 12-bit linearity
- Small size
- Single- and dual-ch units
- Over current protected
- Over voltage protected
- Easy to connect
- Rail mountable

EM-M41 is an optical isolator designed for 4...20 mA input signal isolation of PLCs and control systems. Unit provides high isolation voltage. EM-M41 accuracy is sufficient for use in 12-bit applications and supply range is wide. Unit acquires its operating energy from the current loop. Input stage is protected against over current and output stage is protected against over voltage and incorrect polarity. Unit is packed in a rail-mountable housing and is available in 2-channel version as well. With 2-channel model the need for space is only 10mm/channel. The type code for 2-channel model is EM-M41-2.

TECHNICAL DATA:

Supply	10...32 Vdc
Conversion ratio	1:1 (± 0.1 %)
Linearity error	< 0.1 %
Thermal drift	< 100 ppm/°C
Operating range	4...20 mA (1...22 mA)
Input impedance	120 ohm
Input protection	120 mA
Frequency range	DC...100 Hz
Settling time	10 ms (10...90 %)
Isolation voltage	1500 V
Oper. ambient temp.	-10...60 °C
Dimensions (D*L*H)	20*79*75mm
Weight	70 g

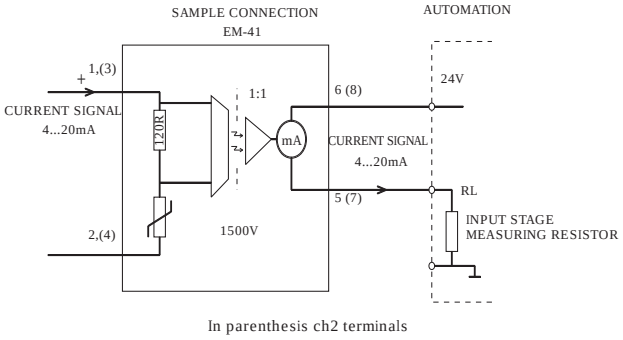

In parenthesis ch2 terminals

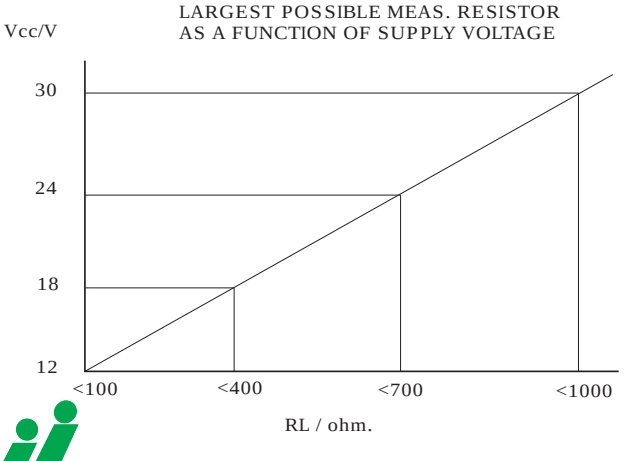

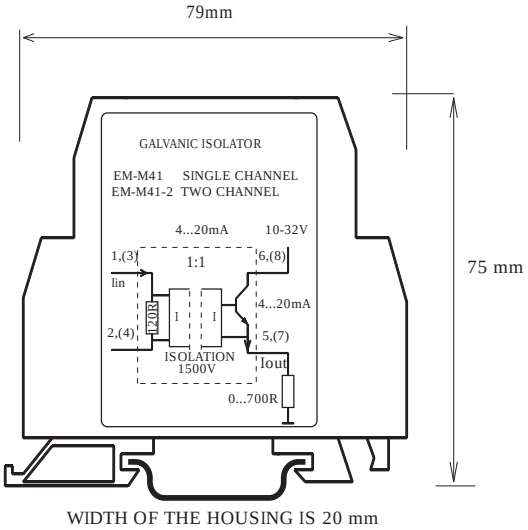

WIDTH OF THE HOUSING IS 20 mm

ELECTROMEN Oy Vähäheikkiläntie 56B, 20810 Turku, FINLAND Tel. +358-2-4693050 Fax. +358-2-4693052

EM-M43 & EM-M43-2 INPUT ISOLATORS FOR PLCs AND CONTROL SYSTEMS, FROM I TO U.

FEATURES:

- Wide supply range
- Isolation voltage 1500 V
- 12 bit linearity
- Small size
- Single- and dual-ch units
- Over current protected
- Easy to connect
- Rail mountable

EM-M43 is an optical isolator designed for input isolation of computers and PLCs. Isolator input is for 4...20 mA signal. Unit provides high isolation voltage. The isolators accuracy is sufficient for 12-bit applications. The unit acquires energy to its primary side from the current loop. Input stage is protected against over current. Output signal can be chosen to be 0...5V or 0...10V. The operating voltage range is wide and isolator supply is protected against incorrect polarity. Unit is packed in a rail-mountable housing and is available in 2 channel version as well. With 2 channel model the need for space is only 10mm/channel. The type code for 2 channel unit is EM-M43-2.

TECHNICAL DATA:

Supply	15...32 Vdc
Linearity error	< 0.1 %
Thermal drift	< 100 ppm/°C
Input range	4...20 mA (25 mA)
Input impedance	120 ohm
Input limit	120 mA
Output ranges	0...5V / 0...10 V
Load	RL > 1 kohm
Frequency range	DC...100 Hz
Settling time	10 ms (10...90 %)
Isolation voltage	1500 V
Oper. ambient temp.	-10...60 °C
Dimensions (D*L*H)	20*79*75mm
Weight	70 g

SAMPLE CONNECTION

EM-M43 / EM-M43-2

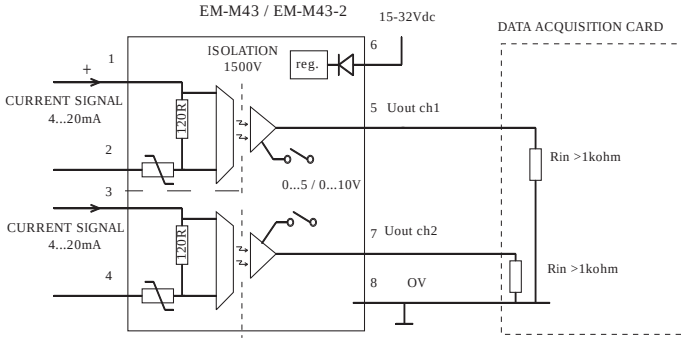

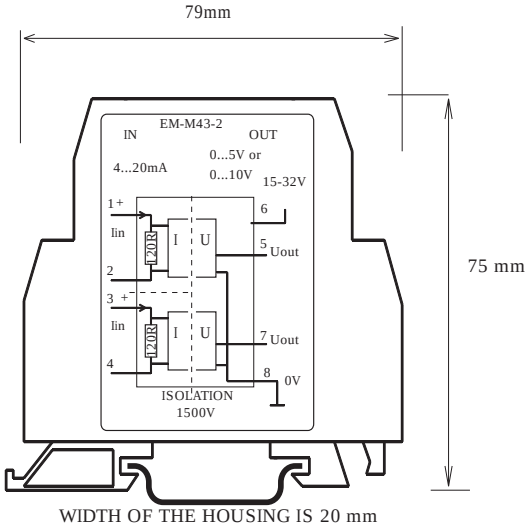

WIDTH OF THE HOUSING IS 20 mm

ELECTROMEN Oy Vähäheikkiläntie 56B, 20810 Turku, FINLAND Tel. +358-2-4693050 Fax. +358-2-4693052

EM-M50 8-CHANNEL ALARM PANEL

FEATURES:

- 8-channels
- Selectable input mode n.o. or n.c. alarm contacts
- Settable input delay
- Settable alarm output delay
- Relay output for alarm
- Blinker and memory for alarm
- Realtime indication
- Invertable outputs
- Test function
- Standard panel mounting size
- Protected against inverse polarity

EM-M50 is an 8-channel alarm logic suitable for alarm control in various automation processes. EM-M50 can be installed to standard 96*96 millimeter slot. Each of the 8-channels can be set to activate either with opening or closing contact. Inputs can be controlled with voltage signal also. The indication output display the state of the input in realtime so the unit is s.c. transparent. Indication outputs can be inverted as well, then the output is reversed compared to input.
The alarm logic operates in following manner. When the fault signal is detected, the indication light of the particular channel starts to blink and group alarm relay and alarm output gives an alarm. If the fault causing the alarm is removed the alarm stays. The alarm can be removed only with reset button. When the alarm is acknowledged the group alarm is removed, indication light stays lit until the input situation has been normalized. So new alarm blinks and old one stays lit. The alarm input can be delayed for 0.5 to 4 seconds. Alarm output can be delayd for 0 to 10 seconds. Delay is the same for all channels. Operation of the unit can be verified with test button. EM-M50 is equipped also with test and reset inputs. With these inputs several units can be connected in parallel to form groups.
The group alarm relay is de-energized when alarm occurs so an operating voltage failure causes an alarm as well. Operating voltage input is protected against voltage surges and inversed voltage.

TECHNICAL DATA:

Supply	12...32 Vdc
Current consumption	200 mA
Input levels	“0” < 1 V “1” > 4 V
Input voltages	max. ±35 V
Input impedances	10 kohm (in 1-8)
Relay output	1 A 125 Vac / 30 Vdc
Transistor output	NPN-open collector
Load capacity of output	120 mA
Alarm delays	1 ... 8 s
Output delay	0 ... 15 s
Oper. ambient temp.	0...50 °C
Mounting hole	92*92 or 88*88 mm
Dimensions	96*96*40 mm
EMC-tested and CE-marked	

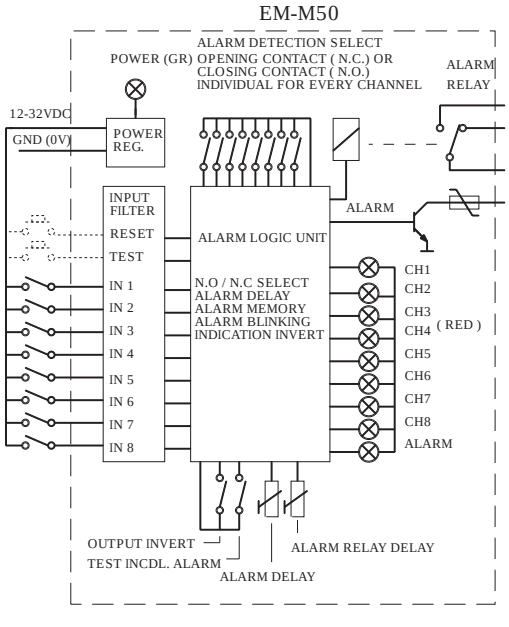

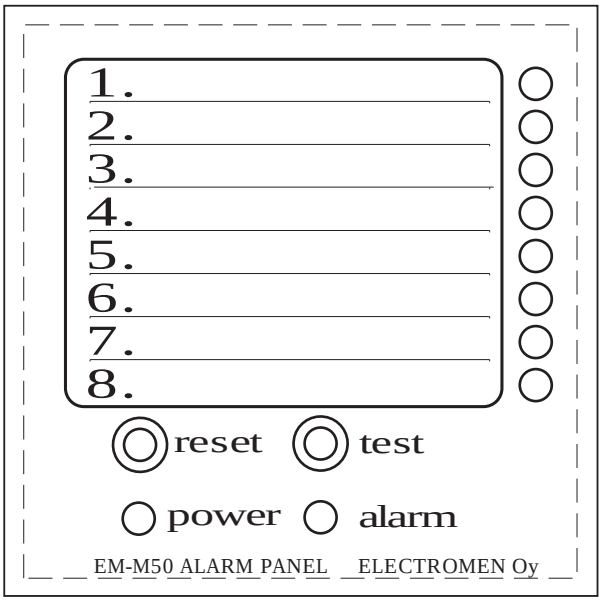

ALARM INDICATIONS FOR EACH CHANNEL
RED LED LIGHTS

MOUNTING HOLE MIN. 88x88 mm
MAX. 92x92 mm
FREE DEPTH MIN. 40 mm

ALARMS, CHANNELS 1-8
SWITCH "ON" = OPENING CONTACT OR Uin < 1.5V
CAUSES AN ALARM
SWITCH "OFF"= CLOSING CONTACT OR Uin >4V
CAUSES AN ALARM
NUMBER OF SWITCH INDICATES THE CHANNEL.
IF THE INPUT IS NOT USED SET SWITCH "OFF"

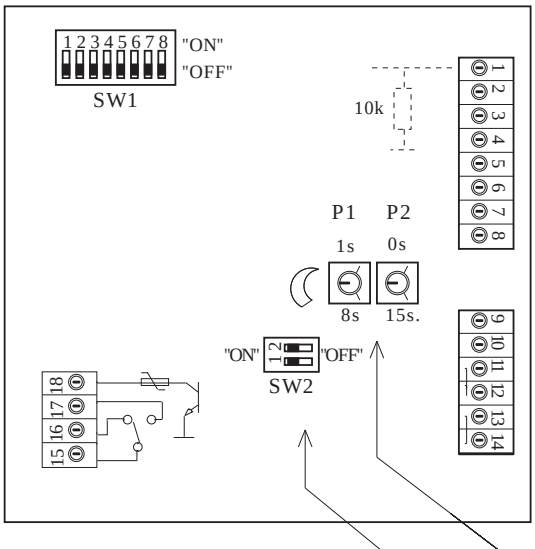

ALARM INPUTS 1-8

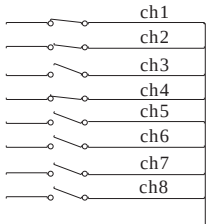

ALARM INPUTS 1 - 8 INPUT IMPEDANCE 10k. CAN BE CONTROLLED WITH CONTACT OR VOLTAGE SIGNAL MAX. ±35 V, LIMITS "0" < 1 V AND "1" > 4 V

AUX. INPUTS FOR RESET AND TEST CAN BE CONNECTED ACCORDING TO THE PICTURE IF EXTERNAL CONTACTS ARE USED.
IF THERE ARE SEVERAL PANELS IN ONE GROUP,THE RESET INPUT (19) CAN BE LINKED TOGETHER. SAME WAY THE TEST INPUTS (10) CAN BE OPERATED WITH ONE CONTACT.

RESET AUX.
TEST AUX.
gnd
gnd — 0V
SUPPLY
SUPPLY — 12-32V (200mA)

P1 IS A DELAY ADJUSTMENT FOR ALARM INPUTS IT CAN BE SET FROM 1 TO 8 SECONDS.
P2 IS A DELAY ADJUSTMENT FOR RELAY OUTPUTS IT CAN BE SET FROM 0 TO 15 SECONDS.

SW2 CONTACT 1 IS FOR INVERTING THE OPERATION
"ON" = NORMAL OPERATION "OFF" = INVERTED OPERATION

SW2 CONTACT 2 IS TO DETERMINE THE TEST OPERATION
"ON" = RELAY OUTPUT NOT RESPONDING TO TEST BUTTON
"OFF" = RELAY OUTPUT RESPONDING TO TEST BUTTON

ALARM OUTPUTS
NPN - TRANSISTOR MAX. 100 mA
RELAY 1A / 125Vac / 30 Vdc
RELAY PICTURED IN NORMAL CONDITION

ELECTROMEN Oy Vähäheikkiläntie 56B, 20810 Turku, FINLAND Tel. +358-2-4693050 Fax. +358-2-4693052

EM-M66 RAMP GENERATOR

FEATURES:

- Three way isolated
- Multiple output ranges
- 254 steps
- Dip-switch settable
- Multiple ramp speeds
- Zero and gain fine adjustments
- Isolation voltage 1000V
- Short circuit protected output
- Rail mountable

EM-M66 ramp generator output can be controlled (enlarged/reduced) with two control inputs, for example with switches or on-off voltage signals. The control, output and current supply parts are galvanically isolated. The ramp speed, in other words the change time 0-100% is settable with dip-switches. The control input has ±1 -step feature, that increases or decreases the output value as soon as the control is activated. This is followed by a 0,1s or 0,3s delay before continuous stepping starts. This feature makes it possible to drive "step by step" even if the ramp is fast.
The ramp-generator startup situation (when switching the unit on) value can also be set with dip-switches. Possible values for this are 0%, 50%, 100% or LAST which continues from the value the unit had when it was switched off. Output signal can be set to voltage or current signal using dip-switches. The fine adjustments zero and gain have the same relative effect on output in all ranges and they don't affect each other. The devices output stage is protected against short circuit and the supply input against reversed polarity.

TECHNICAL DATA:

Supply voltage	20...32 Vdc
Current consumption	max. 80mA
Output stages 0-100%	
-10...+10V	RL>1 kohm
0...+10V	RL>1kohm
-5...+5V	RL>1 kohm
-1...1V	RL>1 kohm
0...+1V	RL>1 kohm
-20...+20mA	RL<500 kohm
0...20mA	RL<500 kohm
4...20mA	RL<500 kohm
Ramp speed	1, 2, 4, 7, 10, 15, 20 or 25s
Startup delay	0,1 or 0,3s
Control signal	4-30 Vdc
Input impedance	1,5 kohm
Resolution	254 steps
Adjustments	Zero ±20% / Gain ±20%
Precision	0,5%
Thermal drift	<200ppm
Isolation voltage	1000V
Oper. ambient temp.	0...50°C
Weight	approx. 90 g

EM-M66

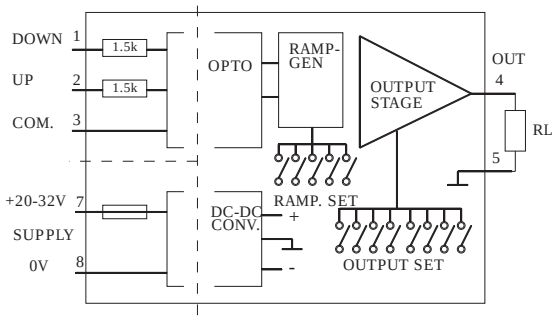

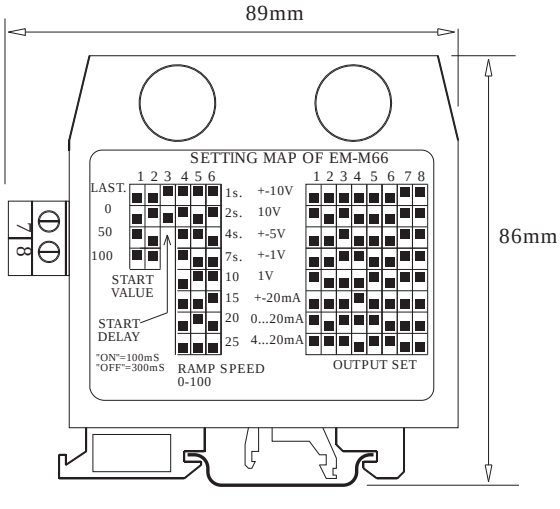

WIDTH OF THE HOUSING IS 25mm

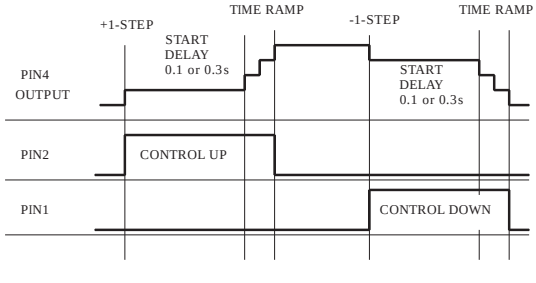

ELECTROMEN Oy Vähäheikkiläntie 56B, 20810 Turku, FINLAND Tel. +358-2-4693050 Fax. +358-2-4693052

EM-M69 CURRENT MEASURE UNIT 50A dc/ac

FEATURES:

- Wide frequency range
- True RMS measurement
- Also for thyristor power controller and inverter current measurement
- Dip switch settable
- 50A RMS (150A peak)
- mA and V output
- Gain and zero adjustment
- Over voltage protected
- Reversed polarity protected
- Easy to connect
- Rail mounting base available

EM-M69 uses zero compensated Hall transducer current sensor, that works in a wide frequency range, from dc to 10 kHz. This feature gives true current value also in inverter and thyristor power controller applications. The device output signal is either momentary (direct) or converted to true RMS value. Output signal can be set to mA or V. The device is scaled 0-100% => 0-50A, the scale can be fine tuned with zero and gain adjustments. The scale can also be set by adding wiring through loop, for example two wires double the output 0-100% => 0-25A and so on. The device is connected like a three wire transducer: supply, signal, gnd. The input is protected against faulty connections and voltage peaks.

TECHNICAL DATA:

Operating voltage	21...32VDC
Current comsumption	max. 100mA
Measuring range	50A rms (150A peak)
Output signal (mom.)	4...20mA (0...50A)
	± 5V (± 50A)
	± 10V (± 50A)
Output signal (rms)	4...20 mA (50A rms)
	0...5V (50A rms)
	0...10V (50A rms)
Load capacity	<600 ohm (mA out)
	>1kohm (V out)
Crest factor	2 (50A), 10(10A)
Linearity error	<0,3% (sine wave)
Thermal drift	<200 ppm/°C
Settling time	0,05ms (mom.)
	0,3s (rms)
Measuring frequency	DC...10kHz
Loop resistance	0...600ohm (24V)
Operating temp.	0-50°C

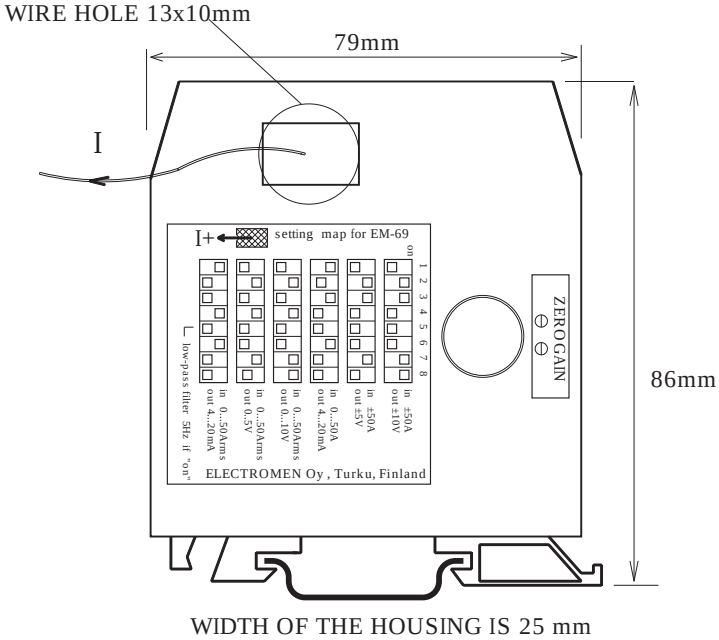

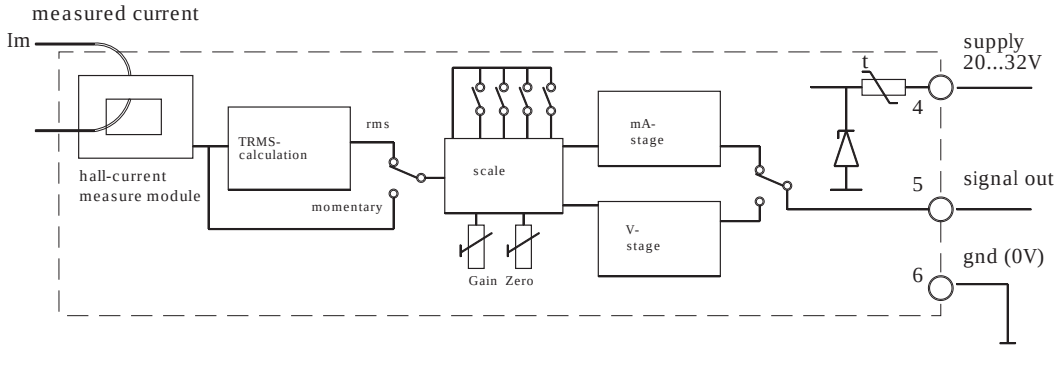

ELECTROMEN Oy Vähäheikkiläntie 56B, 20810 Turku, FINLAND Tel. +358-2-4693050 Fax. +358-2-4693052

EM-M69-iso CURRENT MEASURE UNIT 50A dc/ac

FEATURES:

- Wide frequency range
- True RMS measurement
- Galvanic supply isolation
- Also for thyristor power controller and inverter current measurement
- Dip switch settable
- 50A RMS (150A peak)
- mA and V output
- Gain and zero adjustment
- Over voltage protected
- Reversed polarity protected

EM-M69 uses zero compensated Hall transducer current sensor, that works in a wide frequency range, from dc to 10 kHz. This feature gives true current value also in inverter and thyristor power controller applications. The device output signal is either momentary (direct) or converted to true RMS value. Output signal can be set to mA or V. The device is scaled 0-100% => 0-50A, the scale can be fine tuned with zero and gain adjustments. The scale can also be set by adding wiring through loop, for example two wires double the output 0-100% => 0-25A and so on. The supply of the device is galvanically isolated. The input is protected against faulty connections and voltage peaks.

TECHNICAL DATA:

Operating voltage	21...32VDC
Current comsumption	max. 100mA
Measuring range	50A rms (150A peak)
Output signal (mom.)	4...20mA (0...50A)
	± 5V (± 50A)
	± 10V (± 50A)
Output signal (rms)	4...20 mA (50A rms)
	0...5V (50A rms)
	0...10V (50A rms)
Load capacity	<600 ohm (mA out)
	>1kohm (V out)
Crest factor	2 (50A), 10(10A)
Linearity error	<0,3% (sine wave)
Thermal drift	<200 ppm/°C
Settling time	0,05ms (mom.)
	0,3s (rms)
Measuring frequency	DC...10kHz
Isolation voltage	500V
Loop resistance	0...600ohm (24V)
Operating temp.	0-50°C

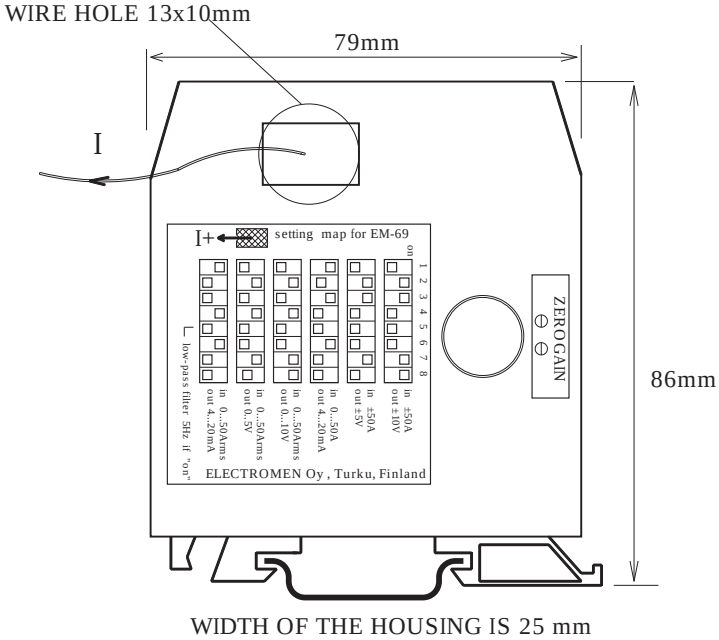

WIDTH OF THE HOUSING IS 25 mm

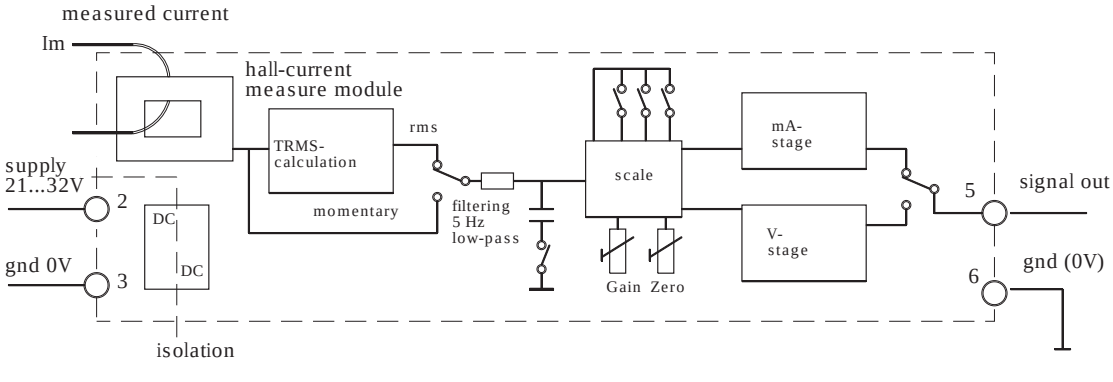

ELECTROMEN Oy Vähäheikkiläntie 56B, 20810 Turku, FINLAND Tel. +358-2-4693050 Fax. +358-2-4693052

ELECTROMEN

Electromen Oy Ltd
Vähäheikkiläntie 56 B, Fi-20810 Turku, Finland
Phone +358 2 469 3050, Telefax +358 2 469 3052
Email postmaster@electromen.com, Website www.electromen.com

MEASURING AND SUPERVISION DEVICES

ELECTROMEN

HALL-EFFECT ROTATIONAL SPEED SENSOR EM-30-HALL

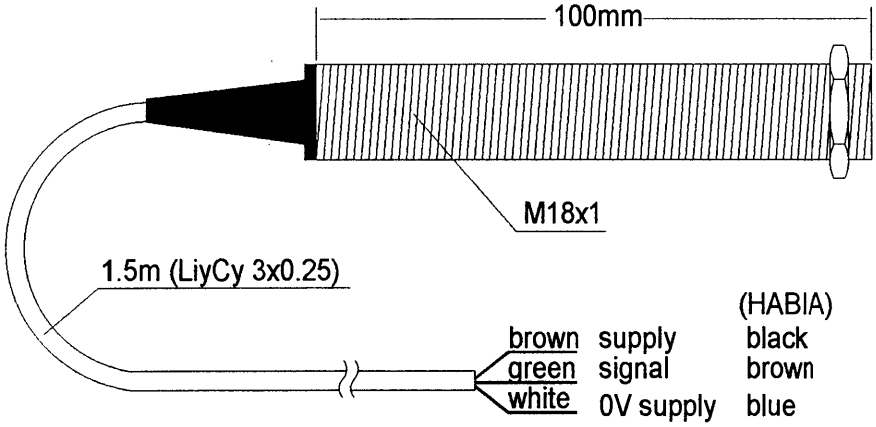

Features:

* For ferrous gear wheels
* Up to 5kHz
* Zero speed capability
* Voltage range 12-30Vdc
* Short circuit protected
* Supply polarity protected
* High RF-immunity
* IP-67 / stainless body
* Temp. range -10...80°C

EM-30-HALL -transducer operates with ferrous materials. Transducer is sensitive to the direction of the magnetic flux. The transducer has marks for directing it to the rotating level of the gear wheel. The air gap between wheel and transducer can vary from 3 to 0mm. The nominal installation distance is 2mm. The minimum nominal module for the gear wheel is 2mm (DIN). If the transducer is used with gear wheels smaller module than 2mm, the installation distanc should be decreased. With substantially larger gear teeths the distance can be increased to 3mm.

Technical information:

Supply voltage:	12 - 30Vdc
Quiescent current:	max. 25mA
Output current:	source Vcc/2200ohm sink 30mA
Pulse frequency:	0...5kHz
Gear wheel module:	nom. min. 2mm
Installation distance:	2mm, nominal
Operating temp. range:	-10...80°C
Degree of protection:	IP 67
Body (and nut) material:	AISI 317

Output stage

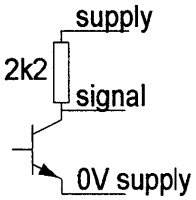

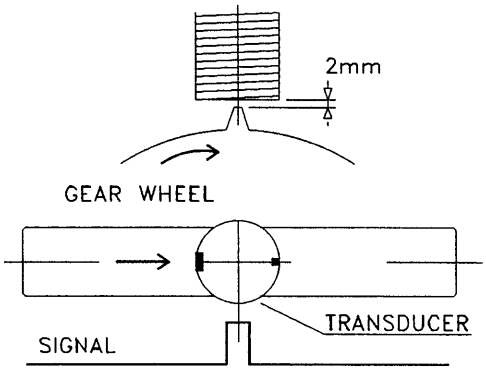

Tooth coming from the direction of the larger mark gives an up-going pulse.

ELECTROMEN Oy

Vähäheikkiläntie 56B,
20810 Turku, FINLAND
website: www.electromen.com

tel: +358-(0)2-4693050
fax: +358-(0)2-4693052
e-mail: postmaster@electromen.com

EM-72 VIBRATION CONTROL UNIT

FEATURES

- **acceleration / velocity measuring mode**
- **galvanically isolated power supply**
- **settable lowpass & hipass filters**
- **compact size**
- **alarm and warning relay output**
- **TrueRMS output, mA - signal**

This vibration monitoring system consists of accelerometer EM-82 and of combined transducer supply and monitor unit EM-72. Accelerometer is built to a light alloy housing IP67 and the monitoring unit is delivered in polycarbonat housing with protection class IP65.
The structure of EM-82 is so-called capacitive single chip transducer. This technique facilitates features as good long-term repeatability, accuracy, shock resistance, good temperature stability and linear frequency response. The output buffer state included in the transducer amplifies the signal thus attaining a good interference tolerance even with higher cable lengths. The accelerometer is available in two ranges.
In addition to the operating voltage supply for the accelerometer the EM-72 monitors the output voltage from the transducer and indicates the malfunctions of the accelerometer or cable. With EM-72 the quantity being monitored can be selected from acceleration / velocity. The highly sophisticated adjustable low- and highpass filters increase the usability of this equipment as they make possible to monitor of just the desired frequency possible. The RMS weighted detector transforms the amplitude of vibration to corresponding DC-voltage. Logic stage controls the DC-level and induces a warning or alarm if the preset border values are exceeded. Alarms can be disabled with so-called alarm block input. All the settings of the system are done with rotating switches or easily readable DIP-switches.
The EM-72 has the outputs for following signals: vibration signal (Voltage), vibration level (mA), warning (relay output) and alarm (relay output).

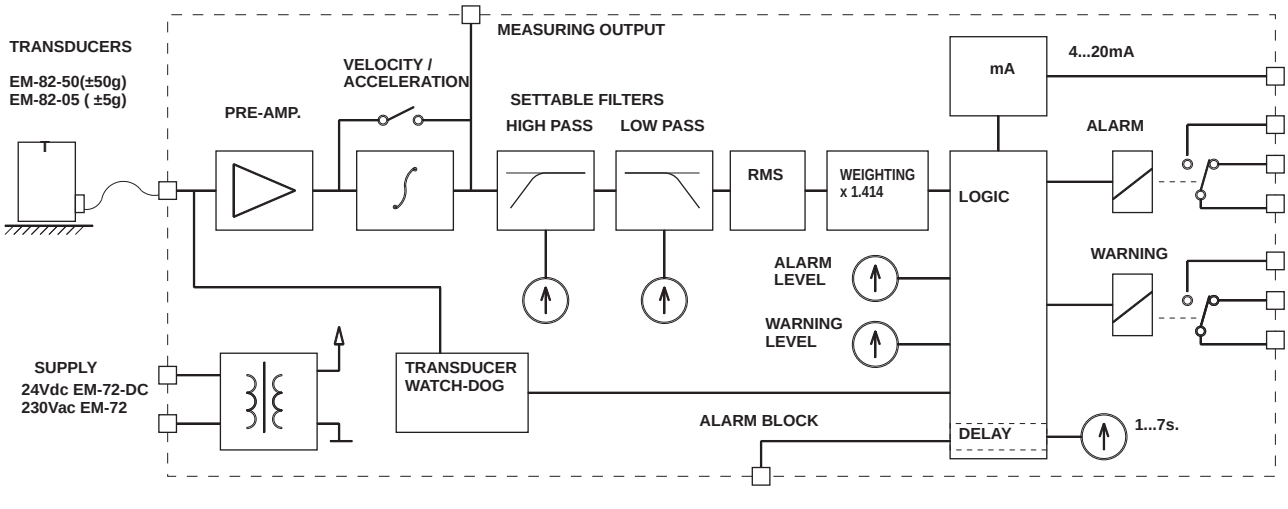

EM-72 or EM-72-DC VIBRATION MONITOR

MOUNTING

Mounting with four M4x20 screws.

CONNECTIONS

1. Transducer supply
2. Transducer signal in
3. Transducer gnd
4. Warning relay N.C.
5. Warning relay COM.
6. Warning erlay N.O.
7. Alarm relay N.C.
8. Alarm relay COM.
9. Alarm relay N.O.
10. Alarm block
11. 4...20mA out
12. Measure out
13. Gnd
14. 230V (L) / 24Vdc
15. 230V (N) / 0V
16. Earth/ shield

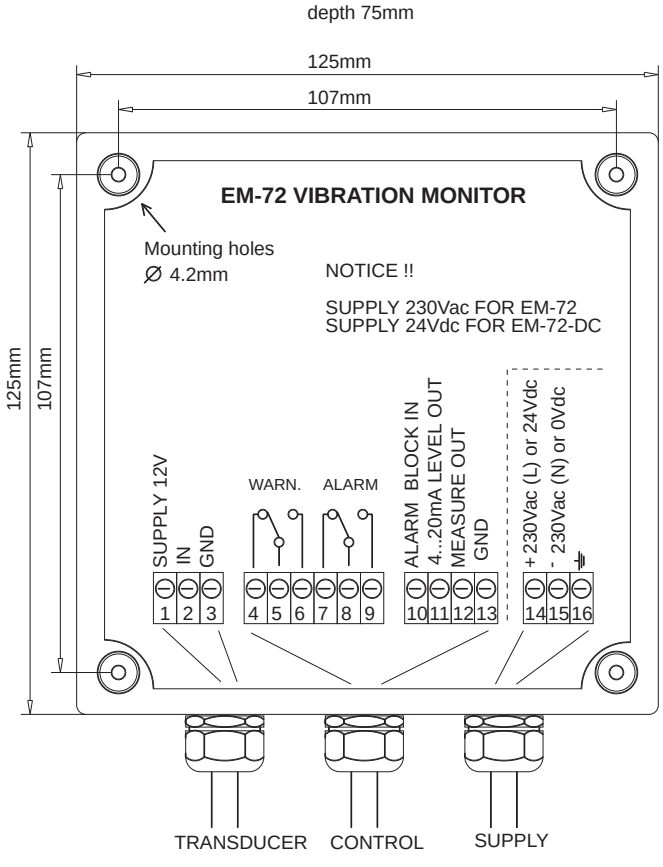

TECHNICAL DATA:

Operating voltage	230Vac or 24Vdc +-15%
Current consump.	50mA or 150mA
Transducer	EM-82-05 or EM-82-50
Supply to transd.	12 V (15 mA)
Low-pass filter	12, 25, 50, 100, 200Hz
(2nd. order)	400, 800, 1600Hz (2nd)
High-pass filter	3, 6, 12, 25, 50, 100Hz
(2nd. order)	200, 400Hz 2 (2nd)
Alarm level	1...50mm/s or 1...50m/s² (-05)
	10...500mm/s or 10...500m/s² (-50)
mA-Output	4...17mA => 0...100%
	R-load 0...300ohm
Measure output	400mV / mm/s or 400mV / m/s² (-05)
	40mV / mm/s or 40mV / m/s² (-50)
Dimensions	125x125x75mm
	140x140x75mm (metal housing)
Operating temp.	0...60°C
Weight.	appr. 200g

ELECTROMEN Oy Vähäheikkiläntie 56B, 20810 Turku, FINLAND Tel. +358-2-4693050 Fax. +358-2-4693052

EM-82-05A VIBRATION TRANSDUCER

8205Abr 26.9.2013

FEATURES

- acceleration sensor
- 5g measuring range
- based on MEMS technology
- good stability
- linear frequency response
- wide supply voltage range
- internal buffer amplifier
- mechically compatible with EM-82-05
- electrically compatible with EM-82-05
- improved dynamic and temperature range

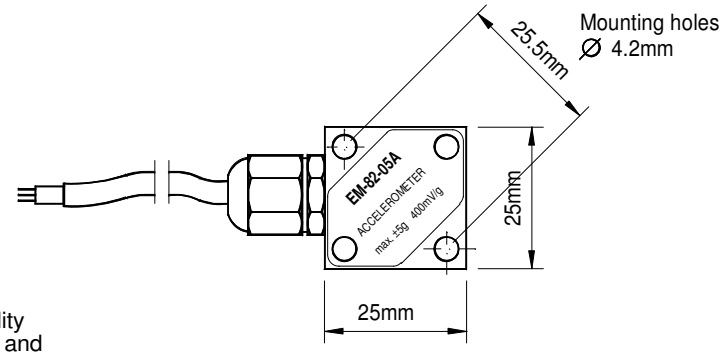

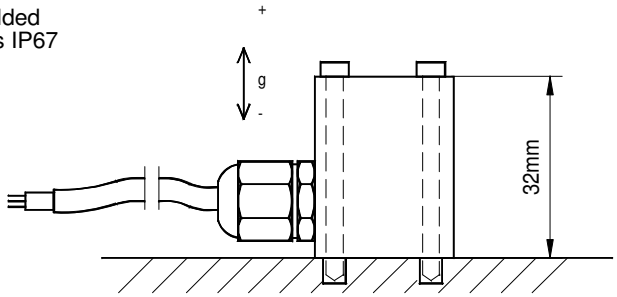

GENERAL

EM-82-05A is acceleration sensor based on MEMS technology. The advantages of MEMS technology are good long term stability, shock resistance, stability and linear frequency response. Additionally thermal and time stability features are superior.
The body of sensor is a aluminium, the sensor is molded to body with chemical aluminiumThe housing class is IP67

MOUNTING

Mounting with two M4x40 screws.
Tighting torgue 3.0Nm
Lockking paste Loctite 242

CONNECTIONS

	habia cable	liy-cy
Supply	black	brown
Signal	brown	green
Gnd	blue	white
Shield	shield	shield

TECHNICAL DATA

Operating voltage	7...32Vdc
Current consump.	7mA
Operating temp.	-20...85℃ continuos
Sensitivity	400mV/g (m/s² = 40.7mV)
Noise	5mV rms (= 0.2m/s²)
Output offset	2.5V
Output swing	±2.0V (0.5 - 4.5V)
Detecting range	±5mg...5g
Frequency response	2Hz-2000Hz +-3dB
	5Hz-1000Hz ±5%
Accuracy	+-3% (159Hz)
Thermal drift	<0.05% / ℃
Cabel lenght	3m
Dimensions	25x25x35mm
Housing	IP67
Weight	appr .60g

frequency range
EM-82-05A

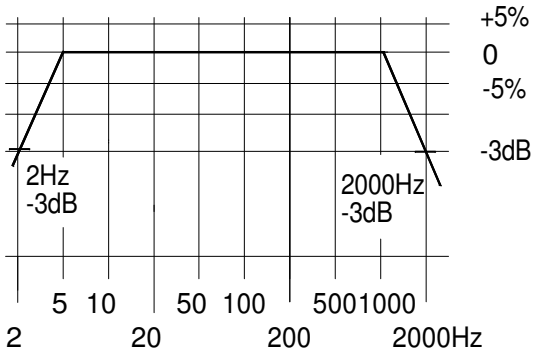

8235broe 6.6.2012

EM-82-35 VIBRATION TRANSDUCER

FEATURES

- acceleration sensor
- 35g measuring range
- based on MEMS technology
- good stability
- linear frequency response
- wide supply voltage range
- internal buffer amplifier
- mechically compatible with EM-82-50A
- electrically compatible with EM-82-50A up to 35g vibration level application

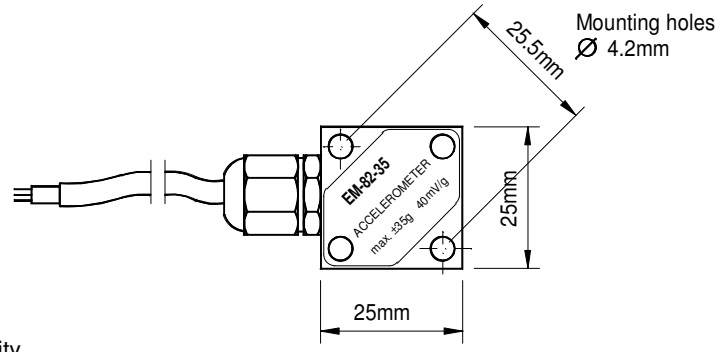

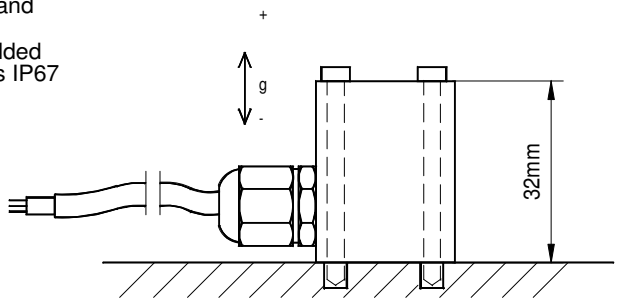

GENERAL

EM-82-35 is acceleration sensor based on MEMS technology. The advantages of MEMS technology are good long term stability, shock resistance, stability and linear frequency response. Additionally thermal and time stability features are superior.
The body of sensor is a aluminium, the sensor is molded to body with chemical aluminiumThe housing class is IP67

MOUNTING

Mounting with two M4x40 screws.

CONNECTIONS "habia cable"

Supply	black
Signal	brown
Gnd	blue
Shield	shield

TECHNICAL DATA

Operating voltage	7...30Vdc
Current consump.	7mA
Operating temp.	-20...105°C continuos
Sensitivity	40mV/g (m/s² = 4.07mV)
Noise	2mV rms (= 0.50m/s²)
Output offset	2.5V
Output swing	±1.4V (1.1 - 3.9V)
Detecting range	±25mg...35g
Frequency response	5Hz-500Hz +-3dB
	10Hz-400Hz ±5%
Accuracy	+-3% (159Hz)
Thermal drift	<0.05% / °C
Cabel lenght	3m
Dimensions	25x25x35mm
Housing	IP67
Weight	appr .60g

frequency range
EM-82-35

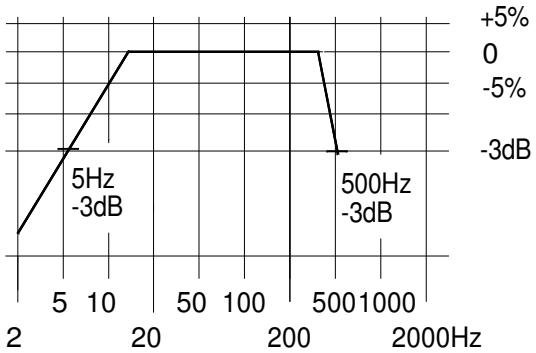

EM-82-50B VIBRATION TRANSDUCER

8250Bbr 12.12.2012

FEATURES

- acceleration sensor
- 50g measuring range
- based on MEMS technology
- good stability
- linear frequency response
- wide supply voltage range
- internal buffer amplifier
- mechically compatible with EM-82-50 /-50A
- electrically compatible with EM-82-50 /-50A
- improved dynamic and temperature range

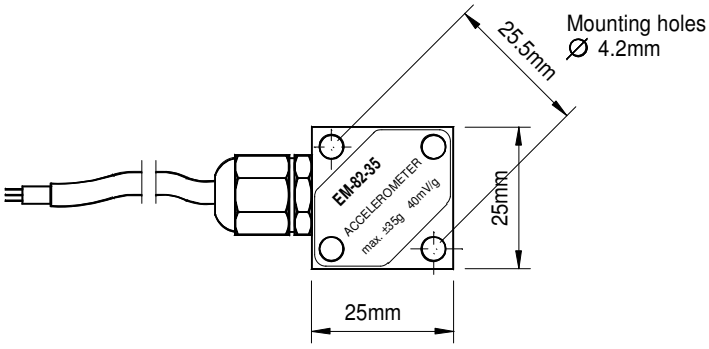

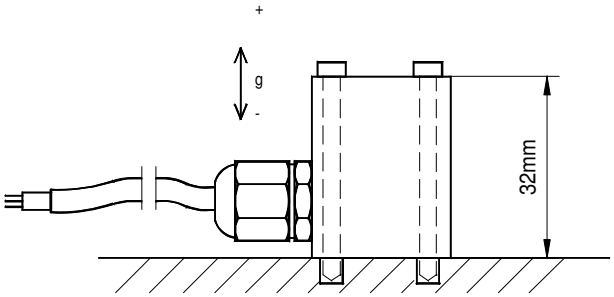

GENERAL

EM-82-50B is acceleration sensor based on MEMS technology. The advantages of MEMS technology are good long term stability, shock resistance, stability and linear frequency response. Additionally thermal and time stability features are superior.
The body of sensor is a aluminium, the sensor is molded to body with chemical aluminiumThe housing class is IP67

MOUNTING

Mounting with two M4x40 screws.

CONNECTIONS "habia cable"

Supply	black
Signal	brown
Gnd	blue
Shield	shield

TECHNICAL DATA

Operating voltage	7...30Vdc
Current consump.	7mA
Operating temp.	-20...105°C continuos
Sensitivity	40mV/g (m/s² = 4.07mV)
Noise	2mV rms (= 0.50m/s²)
Output offset	2.5V
Output swing	±1.4V (1.1 - 3.9V)
Detecting range	±35mg...50g
Frequency response	5Hz-500Hz +-3dB
	10Hz-400Hz ±5%
Accuracy	+-3% (159Hz)
Thermal drift	<0.05% / °C
Cabel lenght	3m
Dimensions	25x25x35mm
Housing	IP67
Weight	appr .60g

frequency range
EM-82-50B

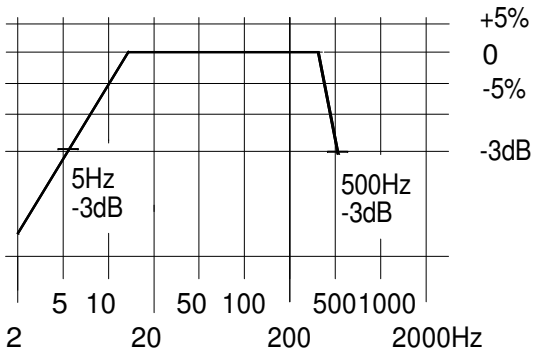

EM-83 SCANNING VIBRATION METER

FEATURES

- True RMS measurement
- reading in mm/s or m/s²
- frequency tunable band-pass filter
- low power consumption
- two sensor options
- auto power off
- good low frequency features
- easy to use
- compact size

APPLICATIONS

- total level vibration measuring
- vibration frequency measuring
- vibration analysis

EM-83 vibration scanner unit can be used for measuring total vibration level or it can be used for detecting discrete frequency components like with analysator. The total vibration level measurement is done using a true rms detection (”rms value”). The frequency component search is enabled with digitally controlled narrow bandwidth band-pass filter. The dominant frequency components can be searched with the auto-stop feature which stops the scanning when the scanned level exceeds the trig value. The bar display helps the search by showing the currently measured (scanned) vibration level in ratio to the total level. Over-range indication warns of exceeding the measurement range of the sensor or the unit.
EM-83 is equipped with good low frequency features which are partially due to mem-type silicon based sensors.
The unit uses sensor types EM-82-05 and EM-82-50. Measuring ranges are ± 5g and ± 50g. These sensors provide a good stability in relation to time and temperature. Sensors have also a good shock resistance.
EM-83 is fairly easy to use, all readings are displayed simultaneously on the clear easy-to-read display. The unit recognizes the sensor used and autoscales the display accordingly.
With a single 9V battery the unit can be used up to 10 hours. Automatic power-off cuts the power after 15 minutes of idle time.
The device is housed to a durable aluminium chassis and the display is shielded with a double layers of glass.

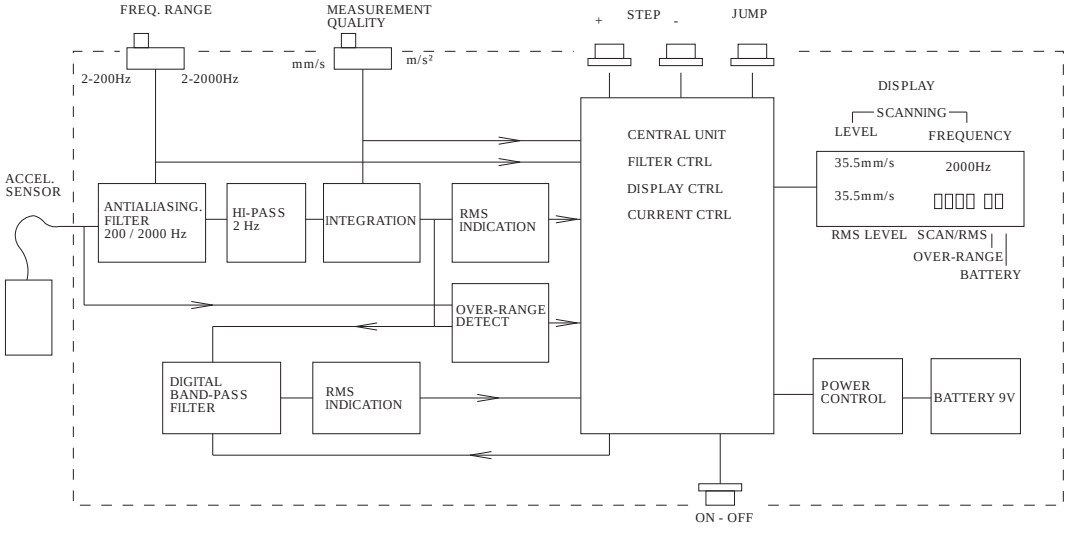

EM-83 FEATURES AND USAGE

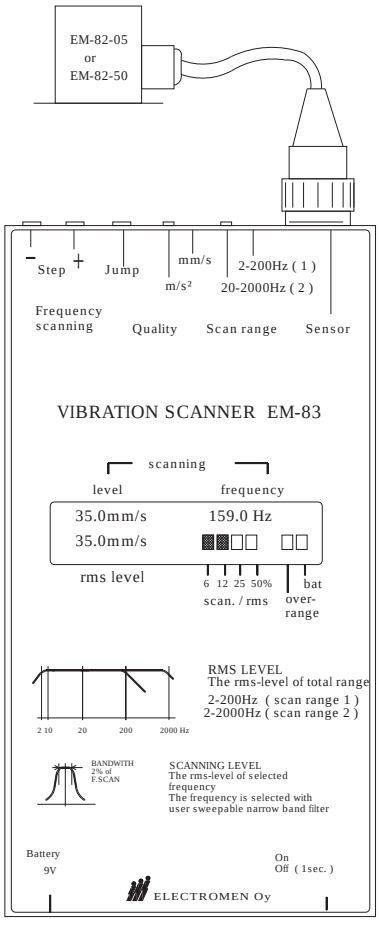

USE

Sensor EM-82-05 has the sensitivity of 400mV/g, maximum range is ± 5g. If OVER-RANGE indication is lit, change the measuring to acceleration (m/s²). If OVER-RANGE is still lit change the sensor type to ± 50G (EM-82-50). The unit will automatically recognize the sensor and autoscale the measurement and display. Sensor can be fixed to the measured body with screws or with magnet.

Switch on the unit with ON-OFF switch, check that BAT indication is not lit. Select the measuring quality to velocity (mm/s) or acceleration (m/s²) and the frequency range to 2-200Hz(1) or 20-2000Hz(2).

RMS-LEVEL display indicates the total vibration level of the selected frequency range. Vibrations on certain frequencies can be searched by using the band-pass filter that lets only the selected frequency through. This frequency is shown in SCANNING FREQUENCY display and the vibration at that frequency is shown in SCANNING LEVEL display.

Scanning can be started from the beginning of the selected range (2Hz or 20Hz) or the start point can be set with the JUMP switch as desired. Pressing STEP+ switch continuously increases the frequency and AUTO-STOP function stops the scanning when vibration peak exceeds 20% of the total level.

SWITCHES

STEP (-) decreases frequency with one step. Continuously pressed the frequency decreases slowly.
STEP (+) increases frequency with one step. Continuously pressed the frequency increases slowly.

JUMP is for faster moving inside the frequency range.

QUALITY is for measurement quality select: acceleration m/s² or velocity mm/s

SCAN RANGE is for selecting the scan frequency range to 2-200Hz or 20-2000Hz. This affects also to the total vibration measuring range (rms-level). The total vibration level range is changed respectively to 2-200Hz or 2-2000Hz.

ON-OFF switches the unit on when momentary pressed, pressed long it shuts down the unit. EM-83 also shuts down automatically after 15min if STEP or JUMP switches are not used.

DISPLAY

The upper line shows scanned vibration level (LEVEL) and the current scanning frequency (FREQUENCY). The lower lineshows the total vibration level (RMS-LEVEL) and the 4 block bar display indicates the scanned level in proportion to the total vibration level. This display helps discovering the dominant vibration peaks.

OVER-RANGE in the lower line indicates that the measurement range is exceeded. If over range occurres change the measurement quality to acceleration (m/s²) or change the sensor to a less sensitive type.

BAT indicates that the battery is running out.

AUTO-STOP function won't stop scanning precisely in the peak of vibration so when the scanning stops the peak must be manually searched using the STEP switches and following SCANNING LEVEL display. After the peak is found continue the scanning using STEP (+) switch towards next peak.

AUTO-STOP function isn't completely full proof, as in cases where two dominant vibration peaks occur close to eatch other. One of the peaks can be left unnoticed if the vibration level is lower than 20% of total vibration level. For this particular reason it's important to follow the SCAN/RMS bar display which indicates the scanned frequency vibration level in proportion to the total vibration level. Also have a look at the SCANNING LEVEL display for changes in level.

The both readings, RMS LEVEL and SCANNING LEVEL indicate the effective value of vibration (RMS).
The noise in scanning level is allways smaller than in rms level, because the rms level includes the summed noice from the total range (2-200Hz or 2-2000Hz) as scanning level includes only the noice of a wery narrow band, the noice on the currently scanned frequency.

When the scanned signal has two frequency components close to each other (frequency diffrence < 5%) the lower peak can be amplificated in measurement due to the unideality of scan filter (technical data, figure 5).

EM-83 TECHNICAL DATA

EM-83

supply	9V battery
operating time	typ. 10 hours
sensor supply	approx. 9V
auto power off	after 15 min
sensor types	EM-82-05 (± 5g), (35m/s² RMS)
	EM-82-50 (± 50g), (350m/s² RMS)
measuring qualities	acceleration (m/s²), velocity (mm/s)
measuring ranges	0.01...35m/s² (RMS) (5g sensor)
	0.1...350m/s² (RMS) (50g sensor)
	0.01...40mm/s (RMS) (5g sensor)
	0.1...350mm/s (RMS) (50g sensor)
total level range	range 1. 2...200Hz
	range 2. 2...2000Hz
signal in scaling	scaled for sensors EM-82-xx
aux in scaling	100mV rms gives 10m/s² reading
precision EM-83	typ. ± 2% (159Hz)
frequency range	see figure 1 & 2 (EM-83 + sensor)
frequency step	2-5Hz step 0.02Hz
	5-10Hz step 0.05Hz
	10-20Hz step 0.1Hz
	20-50Hz, step 0.2Hz
	50-100Hz, step 0.5Hz
	100-200Hz, step 1Hz
	200-500Hz, step 2Hz
	500-1000Hz, step 5Hz
	1000-2000Hz, step 10Hz
weight	450grams + sensor 60grams
dimensions	170x110x35mm
operating temperature	0...50°C

EM-82-50, EM-82-05

supply	7...32Vdc
current consumption	5mA
operating temperature	-20...85°C
scaling EM-82-05	400mV/g
EM-82-50	40mV/g
precision	typ. ± 3% (159Hz)
frequency range	see figure 1 & 2
measuring range	
EM-82-05	± 49m/s² (amplitude)
EM-82-50	± 490m/s² (amplitude)
noise level	
EM-82-05	0.2m/s² (RMS)
EM-82-50	1,5m/s² (RMS)
thermal drift	<0.05% /°C
cable	3m
dimensions	25x25x35mm
housing	IP67
weight	approx. 60grams

fig 3

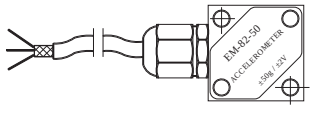

fig 1

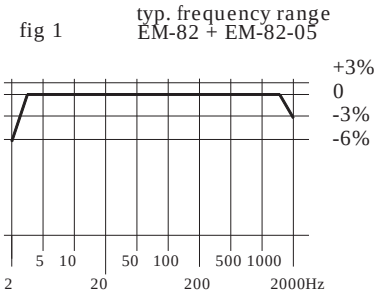

fig 2

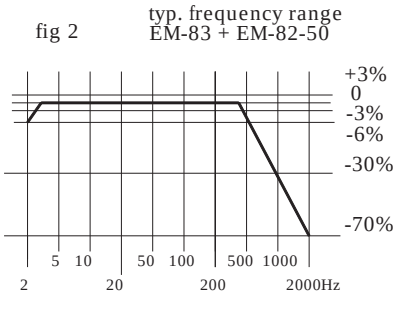

fig 4

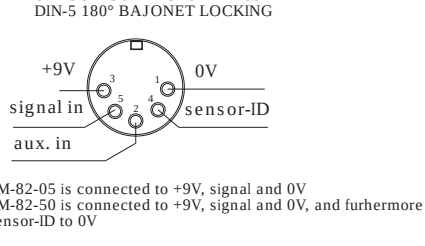

fig 5

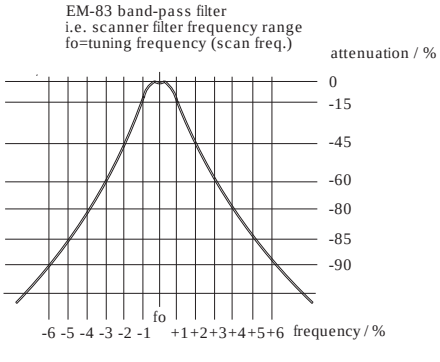

ELECTROMEN Oy Vähäheikkiläntie 56B, 20810 Turku, FINLAND Tel. +358-2-4693050 Fax. +358-2-4693052

EM-95 8-CHANNEL GALVANIC ISOLATOR & SIGNAL CONDITIONER

FEATURES:

- 8-channels
- three way isolated
- multiple operating ranges
- two frequency ranges
- dip-switch settable ranges
- high 12-bit accuracy
- wide operating voltage range
- incorrect polarity protected input
- over current protected output
- small size

USAGE:

- signal galvanic isolation
- signal conditioning
- ripple filter
- interfacing PC-input card

EM-95 8-channel galvanic isolator is designed for input in interfacing PC-input card. The input, output and supply input are galvanically isolated. All 8 channels are also isolated from each other, outputs share gnd.

The signal input can be to common current- and voltage signals. Settings are done easily with dip-switches. There are two frequency ranges, whitch can also be set with dip-switches.

Linearity and resolution exteds to systems up to 14-bit, whereas the absolute precision up to 12-bit systems.

The signal input is over current and voltage peaks protected. The signal output is short circuit protected and current limited so the device won't damage the measuring card in situations with faulty connections.

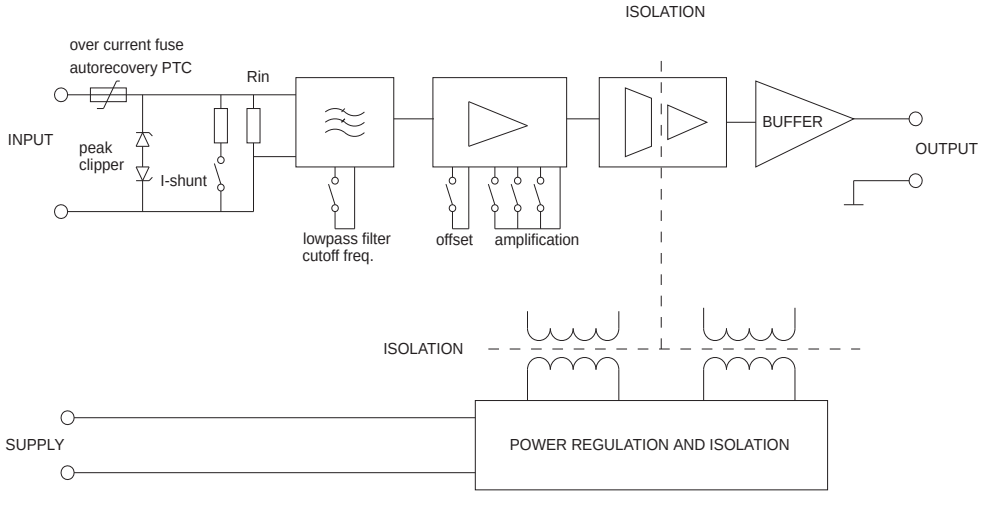

EM-95 INSTRUCTIONS

SETTING INPUT AND OUTPUT RANGES

Each channel is set individually with a DIP switch. All the 8-channels are galvanically isolated from eachother and from the power supply.

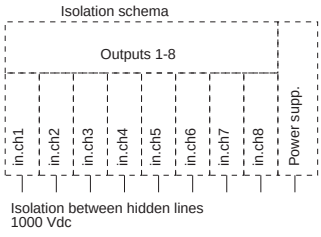

SETTING LOW PASS FILTER

All the 8-channels have individual low pass filter setting. The filter setting doesn't affect to the selected input / output setting.

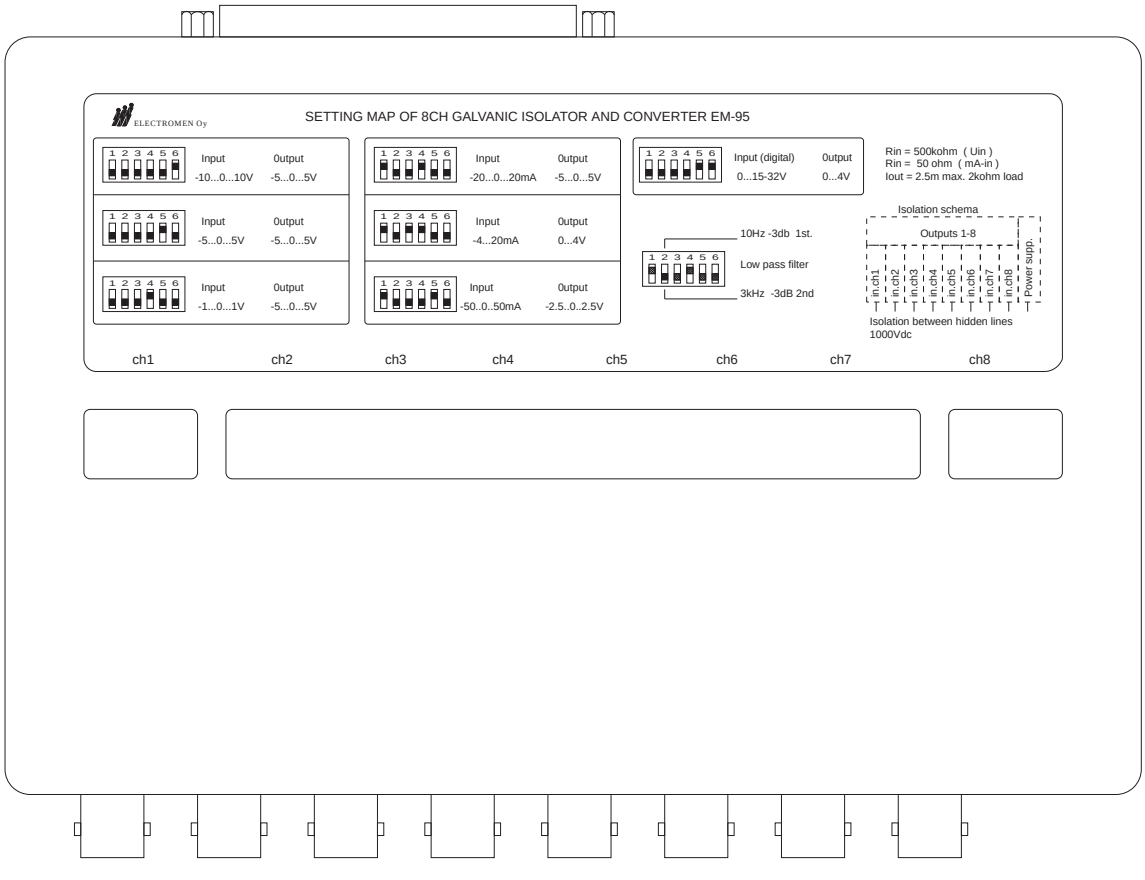

EM-95 SPECIFICATIONS

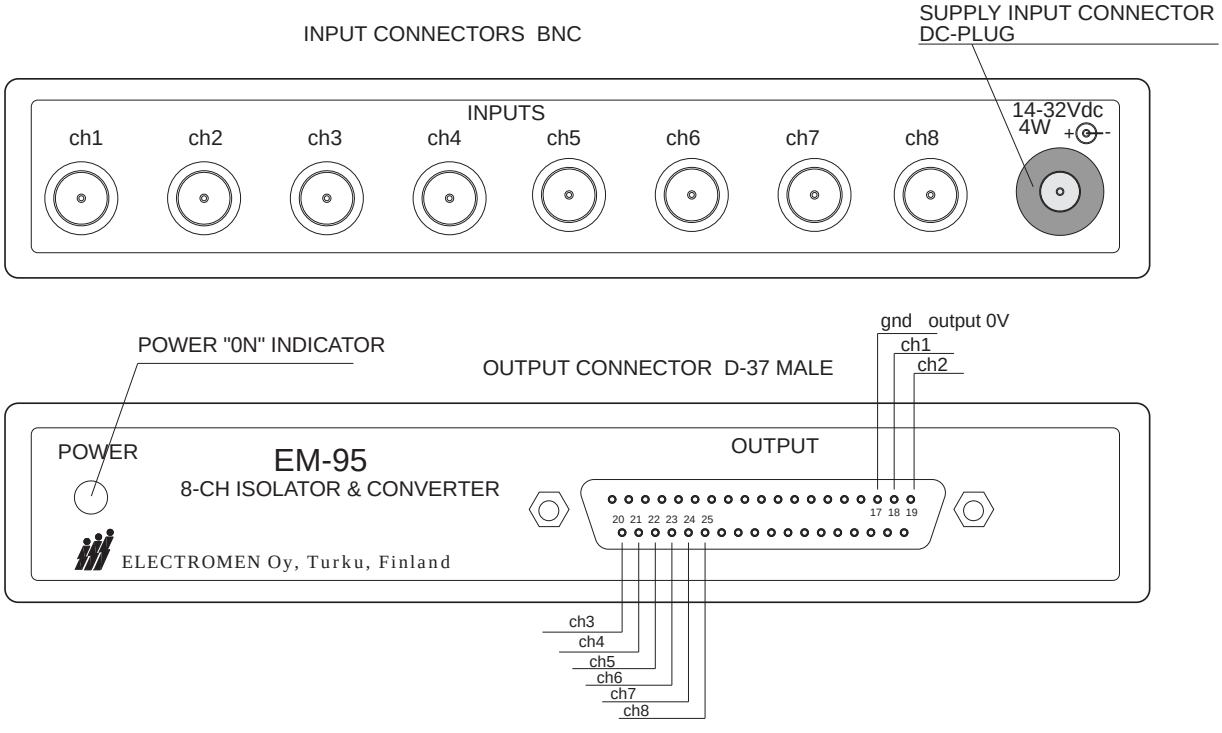

TECHNICAL DATA

Supply voltage	14...32Vdc	
Current consumption	250mA @ Vs 14Vdc	
	140mA @ Vs 32Vdc	
Input ranges	-10...0...10V	(Rin 500kohm)
	-5...0...5	(Rin 500kohm)
	-1...0...1	(Rin 500kohm)
	-50...0...50mA	(Rin 50ohm)
	-20...0...20mA	(Rin 50ohm)
	0...20mA	(Rin 50ohm)
	4...20mA	(Rin 50ohm)
	0>15-35V	(Rin approx 10kohm)
Input voltage limit	±50V	(RMS)
Input current limit	±100mA	(Fused)
Output range	-5...0...5V	
Output current	max. 5mA	
Frequency ranges	0...10Hz -3dB 1st degree filter	
	0...3kHz -3dB 2nd degree filter	
Linearity error	0.02%	
Gain error	0.06%	
Gain drift	0.005% / °C	
Zero error	±2mV	
Zero drift	0.1mV / °C	
Output ripple	900µV RMS (0...20kHz)	
Insulation	1000V	
Housing	Plastic / aluminum IP20	
Dimensions	180x120x40mm	
Oper. ambient temp	0...50°C	

EM-138 30 LED BAR DISPLAY

FEATURES:

- **30 leds**
- **galvanically isolated supply**
- **mA / V input**
- **zero / gain adjustment**
- **panel mountable 96 x 24 mm**

EM-138 is 30 leds bar display. The meter has two measuring ranges: 4...20mA or 0...10V. Signal input is protected against overvoltage and overcurrent. The supply voltage is galvanically isolated from signal stage. Unit has zero and gain trims for signal adjustment. The range selector switch and the adjust trims are located in the rear panel of the device. The color of the display is red-orange. The background color of the meter is black and the markings are white.

TECHNICAL DATA

Supply	20-32Vdc
Current consumption	max. 60mA
Load	4...20mA (60 ohm)
	0...10V (100kohm)
Adj. range	10% (zero)
	10% (gain)
Display	30 led bar display
Display resolution	3.3% step
Display sampling	3 times/s
Isolation voltage	500V (supply / signal)
Housing	IP44
Inst. panel cut-out	92x21mm
Dimensions	96x24x70mm
Operating temp	0...60°C
Weight	n.100g

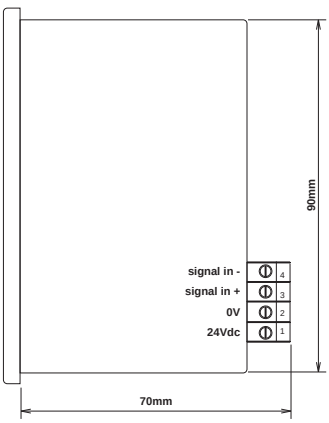

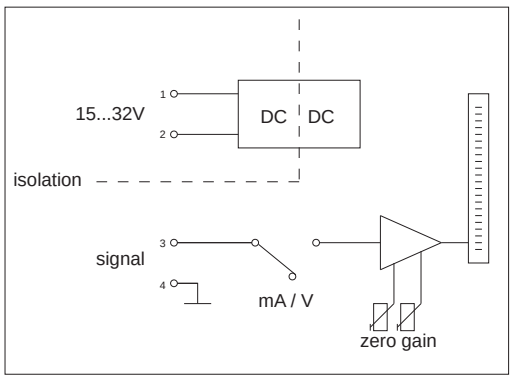

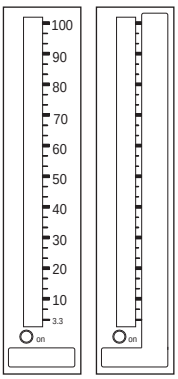

The unit is supplied with two diffirent scale labels: 0...100% and an empty label for desired scale to be placed underneath.

ELECTROMEN Oy Vähäheikkiläntie 56B, 20810 Turku, FINLAND Tel. +358-2-4693050 Fax. +358-2-4693052

TRIPLE BAR DISPLAY EM-138-3-A1

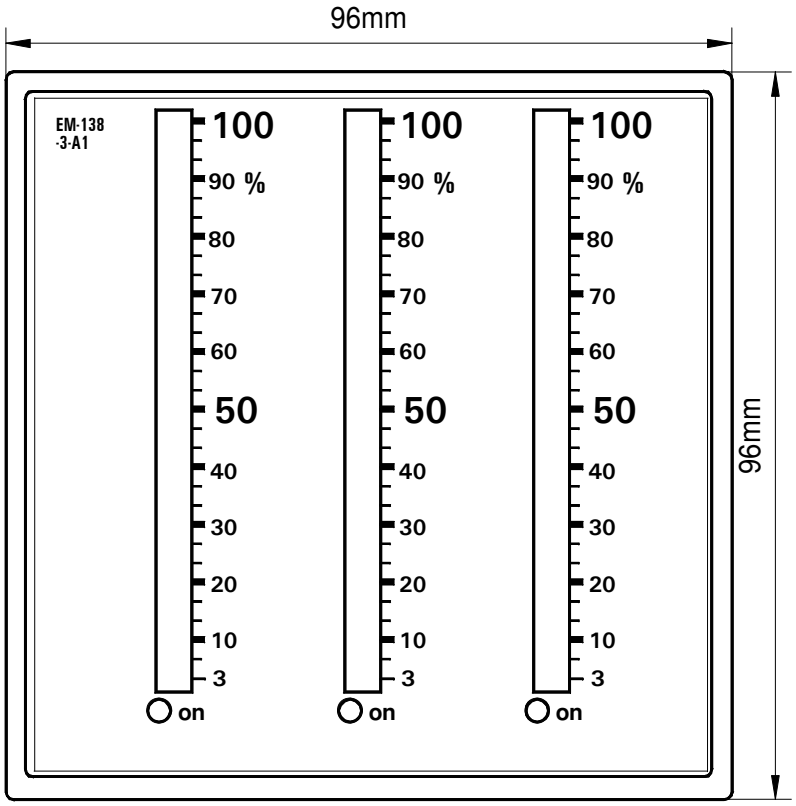

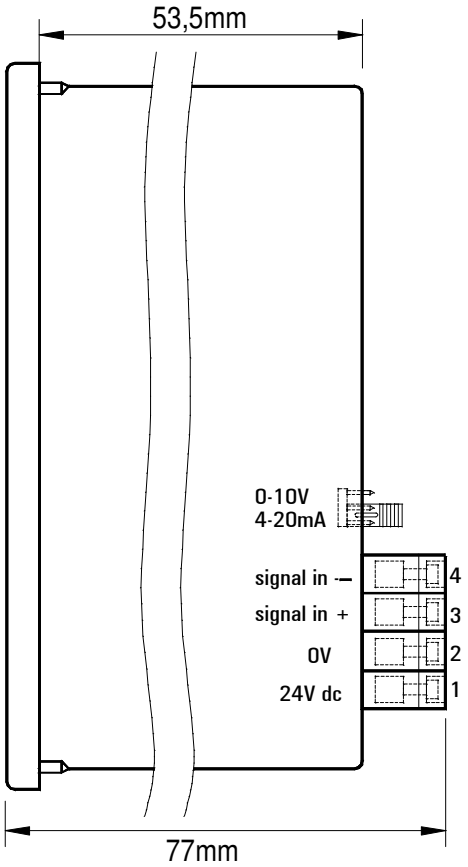

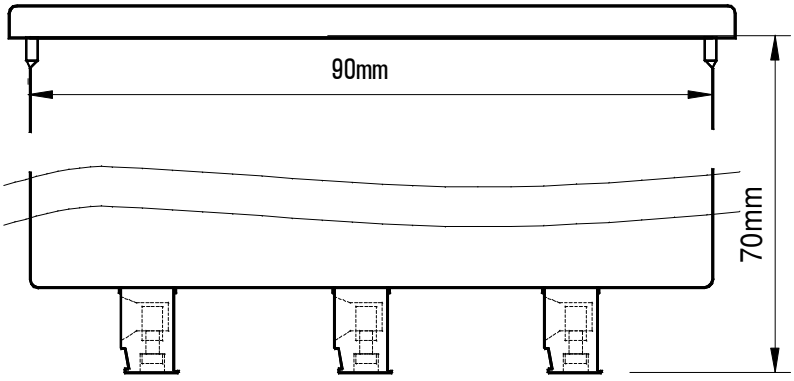

DESCRIPTION

The EM-138-3 is a three channel 30-led bar display. All channels have two selectable measuring ranges 4...20mA and 0...10V. Signal input is overvoltage and overcurrent protected.
Three channels are electrically separate devices, and the signals are galvanically isolated from supply. All channels have adjustments for trimming gain and zero.
The range selectors and the trimmers are located at the rear panel.
Display colour is red-orange. The backround colour is black and the markings are with white.

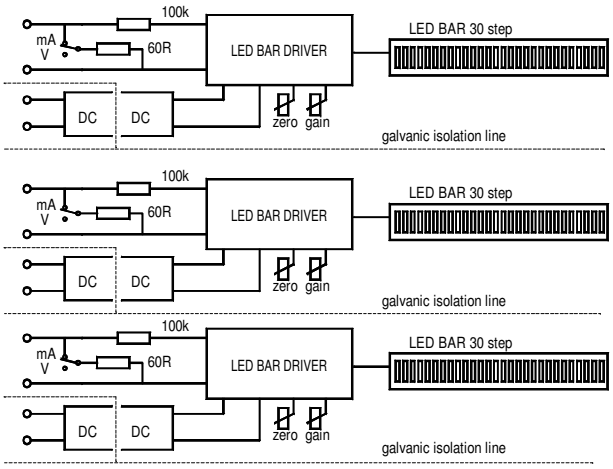

TECHNICAL DATA

Supply voltage	18-32Vdc (24Vdc nom.)
Supply current	max. 50mA / channel
Input ranges	4...20mA (60ohm) 0...10V (100kohm)
Adjustments	zero ± 10% min. gain ± 10% min.
Display	30-leds in bar
Display range	defined case by case
Accuracy	±1led
Sampling	3 times/s
Rated isolation	500Vdc (signal/supply)
Housing	IP40 / IP65 with NGS 96 GHN
Installation	to panel 1-5mm with four NGS-NK screw clamps
Inst. panel cut-out	92x92mm
Dimensions	96x96x77mm
Ambien temp.	5...70°C
Weight	appr. 250g

Connections to screw terminal, cable max. 2,5mm2.
Cable should be shielded and earthed if possible.

EMC-tested and CE-marked

12V BATTERY WATCH-DOG EM-203A

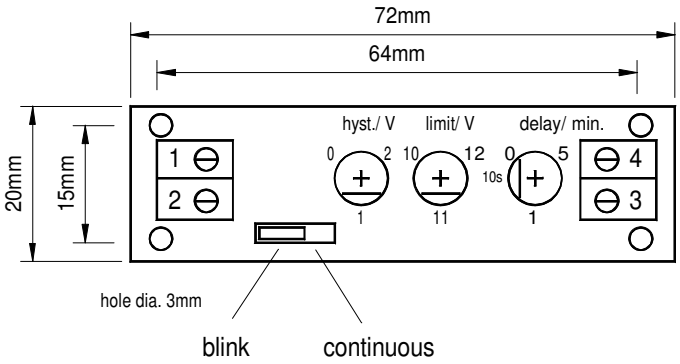

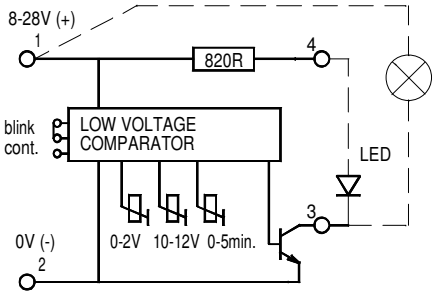

GENERAL

EM-203A is 12V battery voltage (gharge status) monitor. Device can be connected directly to battery poles. The low voltage limit value and recovery hysteresis are adjustable. When low voltage are detected the device will give alarm. The alarm make delay will help to eliminate unnecessary alarms. The alarm will disappear without delay if voltage rises over limit value + hysteresis value

The led indicator can be connected directly to pin 3 and 4. There is also possible to connect relay or indicator lamp to pins 1 and 3. The output transistor mode can be set blinking or continuous mode.

The device own idle current is low to minimize battery discharge.
The mechanical installation can be done with 3mm screw or holder, but it is also possible to mounting device to the DIN-rail base

Technical data

Operating voltage	8-28V
Idle current	
-stand-by	0.9mA
-alarm active "blinking"	1.2mA
-alarm active "continuous"	1.9mA
Output current max.	max. 50mA
Limit value set point	10-12V
Hystersis set range	0-2V
Alarm make delay adj.	0-5 min
Dimensions	see drawing
Operating ambient temp.	-40..60℃

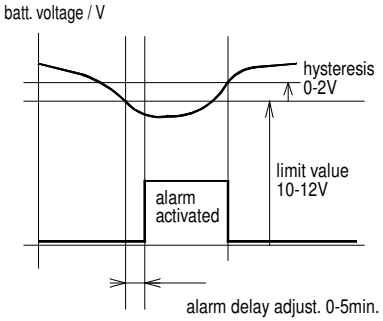

DRIVERS / POWER CONTROLLERS

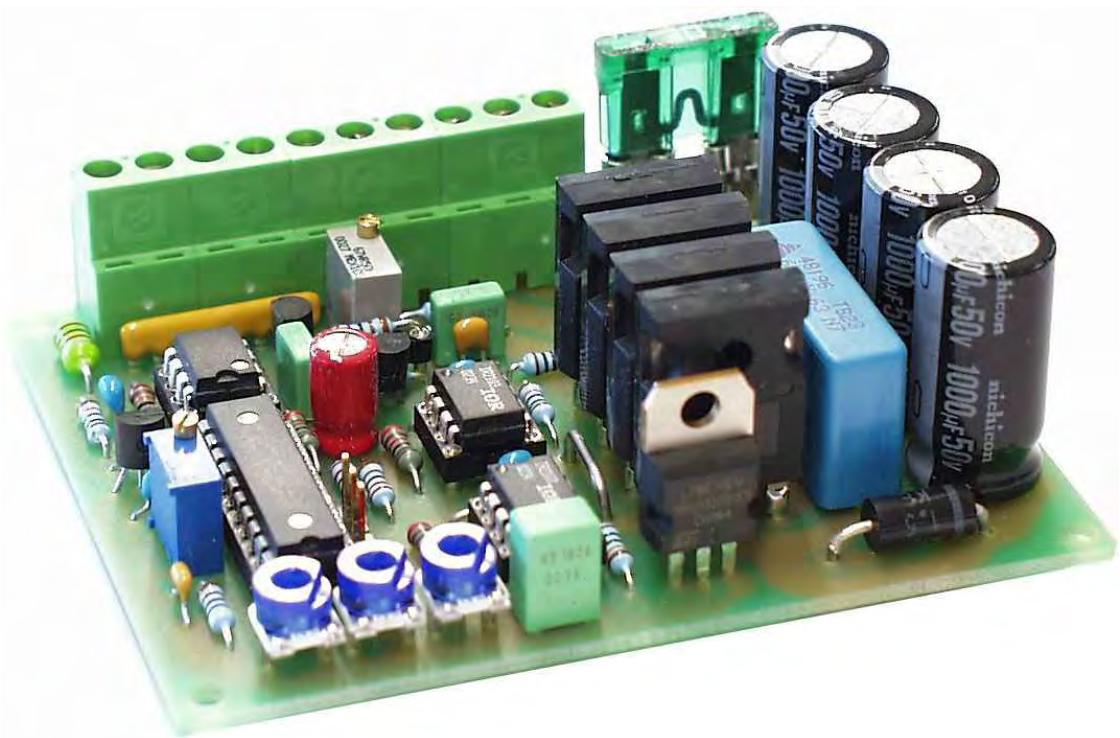

ELECTROMEN

EM-12A PWM DC-MOTOR CONTROL UNIT 24V 8A 200W

FEATURES:

- Continuous power regulation and controlled direction change
- Adjustable current limit, acceleration ramp and max. power limit
- Load short circuit protected
- CB-mode for increased starting torque
- High efficiency, small size
- Controllable with potentiometer, switch or voltage signal
- Rail mounting base available

EM-12A DC-motor control unit is designed for use in industry and automation applications in power range of 0...200 W. With EM-12A DC-motor can be controlled easily and economically.
EM-12A includes many adjustments and various connection choices. Inbuilt protection features increase the reliability of use. CB-function (current boost) eliminates motor rushing if started with load.
EM-12A can be controlled continuously with one potentiometer forward/stop/reverse or the control can be divided to switch and potentiometer or just for switch. EM-12A can be controlled with ±10 V signal as well.

TECHNICAL DATA:

Operating voltage	18...30 Vdc
Idle current	50mA
Load capacity	8A (RMS) mom. 15A (5s)
Operating frequency	approx. 22 kHz
Control pot.meter	10k or 25k 0.25W lin.
Recommended fuses (F1,F2)	max. 8A, slow
Operating temp.	0...50 °C
Dimensions	87*72*28 mm

Adjustments:

Acceleration ramp (0...100%)	0.5 ... 5 s
Current limit	0.5 ... 20 A
Max. power limit	0 ... 100 %

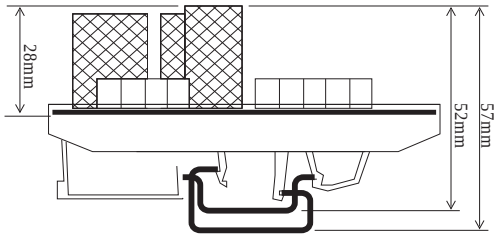

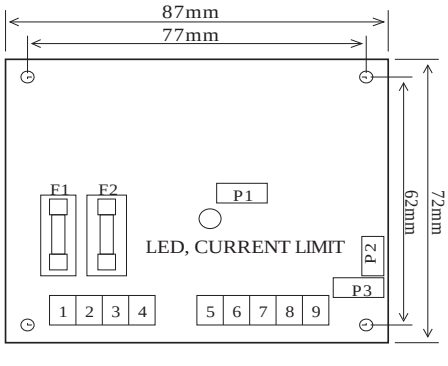

FUSES (8A, SLOW)
F1, SUPPLY
F2, MOTOR

ADJUSTMENTS
P1, CURRENT LIMIT
P2, ACCELERATION RAMP
P3, MAX. POWER LIMIT

EM-12A INSTRUCTIONS

CONNECTIONS
Connection choices are displayed in figures 2a, 2b, 2c and 2d. If the operating direction of the connected potentiometer is not as desired, the outer wires should be switched. If the rotating direction of the motor is not as wanted, the motor wires should be switched.
CAUTION. When the card is supplied from a transformer, capacitor should be added as shown in figures. With battery supply the capacitor is needed only if supply leads are extensive (over 5m).

INTRODUCTION
Adjust the max. power limit to 100 % (P3 clockwise), acceleration ramp to 5 s position (P2 counterclockwise) and the current limit to 20 A (P1 clockwise).

CONTROL LIMIT
Drive the motor full forward or full reverse. If the maximum running speed of the motor needs to be restricted, adjust P3 counter-clockwise until the running speed of the motor is acceptable.

ACCELERATION RAMP
With the preset ramp length of 5 s and maximum power, reversing the motor (full forward <=> full reverse) takes approximately 10 s. If the application can be stopped faster, the acceleration ramp can be set to shorter value by turning the P2 clockwise. DO NOT ADJUST THE RAMP TO SO SHORT VALUE THAT THE REVERSING OCCURS WHILE THE MOTOR IS STILL RUNNING.

CURRENT LIMIT
The purpose of the current limit is to protect the motor from overloading. Adjust the current limit so that the red led on the card is not lit during normal load conditions. NOTE: by adjusting the current limit too low, the torque of the motor is decreased. The operation of the current limit can be checked by overloading the motor.
CAUTION: Do not use the control card in applications with high inertia (eg. flywheel drive) or where the load rotates the motor (eg. automotive devices going downhill).

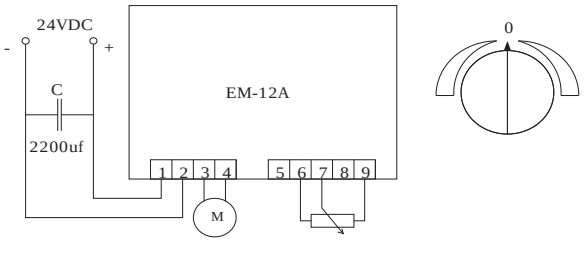

FIGURE 2a. POTENTIOMETER CONTROL. MIDDLE POSITION OF POTMETER FUNCTION STOP. CONTINUOS CONTROL IN BOTH DIRECTIONS

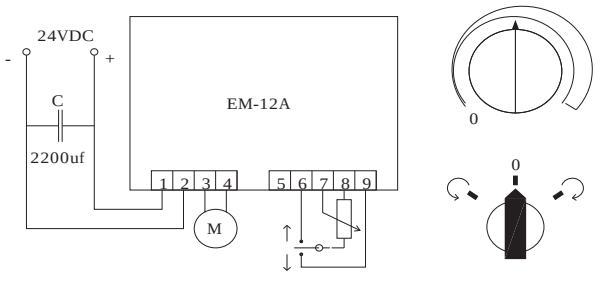

FIGURE 2b. SPEED CONTROL WITH POTMETER, DIRECTION WITH SWITCH. STOP FUNCTION IS ACHIEVED WITH THREE POSITION SWITCH.

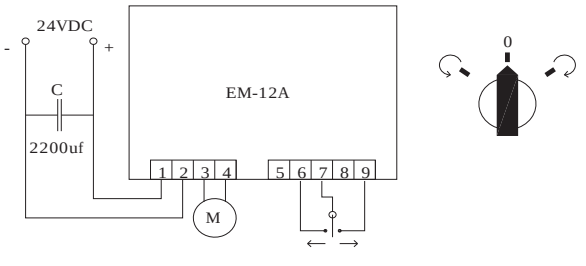

FIGURE 2c. CONTROL WITH SWITCH. FUNCTIONS FORWARD/STOP/REVERSE.

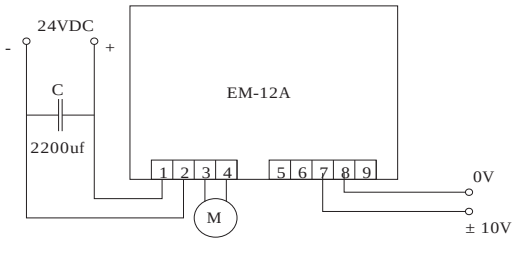

FIGURE 2d. VOLTAGE CONTROL. VOLTAGE SHOULD BE GALVANICALLY ISOLATED FROM DRIVER VOLTAGE.

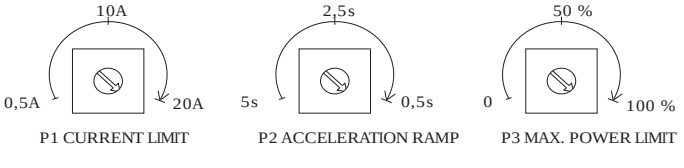

FIGURE 3. EM-12A ADJUSTMENTS.

ELECTROMEN Oy Vähäheikkiläntie 56B, 20810 Turku, FINLAND Tel. +358-2-4693050 Fax. +358-2-4693052

EM-28 DC-MOTOR CONTROL UNIT 12-24V 3A

FEATURES:

- 4-quadrative operation
- Continuous / 2-step speed control
- Adjustable current limit
- Logic inputs for presettable speed
- RI-adjust for load compensation
- Selectable rundown mode, braking / flywheeling
- High efficiency
- Din-rail mountable

EM-28 is designed for modern automation systems. Controls can be performed easily with relay- or open collector -outputs. Analog controls work with positive voltage. Usable motor can be permanent magnet motor with brushes in power range of 5 ... 60 W. Due to the advanced pulse control (PWM) the unit operates with high efficiency, low temperature losses and provides a high starting torque.
Loading of the motor can be compensated with inbuilt RI-adjustment. The current, or in other words, the torque of the motor can be controlled with I-trim or with external control. The operation of the current limit is indicated with red led. The 2 preselectable rotating speeds can be adjusted with 2 control level trims P3 and P4. Alternatively P4 is the max.level adjustment when the analog control is used. In braking the unit leads the energy to the internal resistor of the motor. Braking can be disabled.

TECHNICAL DATA:

Supply voltage	12...32 Vdc
Max. load	3A (RMS) mom 6A (5s)
Operating frequency	approx. 30 kHz
Control pot.meter	1 ... 10 kohm
Recommended fuse	max. 5A, slow
Voltage loss /V	0.5+0.7*Im
Input impedances	> 10 kohm. Pins 6-10
Analog controls	
Pin 8 speed	0 ... 5 V => 0 ... 25 V
Pin 6 current	0 ... 5 V => 0 ... 6 A
Digital controls	
Pin 7,9,10	“on” < 2 V / closed
	“off” > 4 V / open
Operating temp.	0...50 °C
Dimensions	87*72*32 mm
Weight	about 200 g

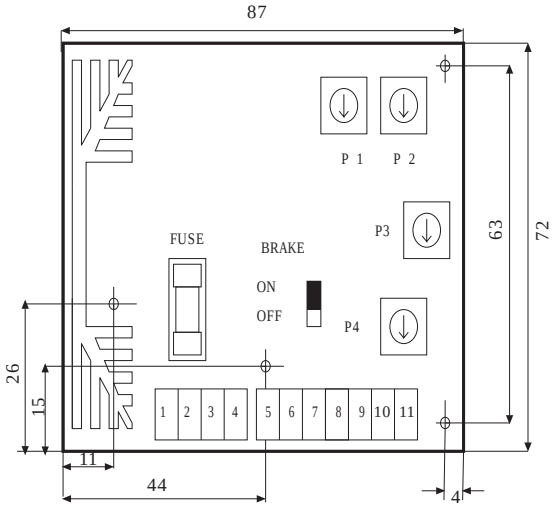

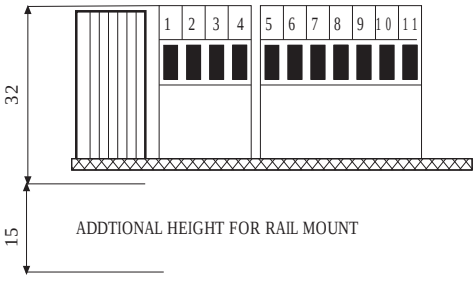

EM-28 OPERATING AND CONNECTION INSTRUCTIONS

INTRODUCTION
Always disconnect supply before making connections. Operating voltage must be filtered DC-voltage with less than 25 % ripple at full load.

ADJUSTMENTS
Set all trims to the middle position. With analog control the maximum running speed is set with trim P4. When using the 2-step speed adjustment set the “fast” speed on (pin 9). Adjust the running speed to desired value with trim P4. Then change to the “slow” speed on (pin 10) and adjust the running speed to desired value with trim P3.

The current limit adjustment is linear between 0 ... 6 A. The set value can be approximately determined from the position of the trim. When more precise adjustment is needed a current meter must be connected to motor circuit. The operation of the current limit is indicated with red led light. During the load compensation adjustment (P1) the load of the motor should be adjusted while observing the speed changes of the motor running speed. The compensation can be increased to point where the motor starts to twitch. Twitching is a sign of over compensation. The compensation adjustment has a slight effect on the running speed settings.

ADJUSTMENTS

P1 LOAD COMPENSATION

P2 CURRENT LIMIT (IF NO EXT. CONTROL)

P3 PRESETTABLE SPEED “SLOW”

P4 PRESETTABLE SPEED “FAST”
OR MAX. LEVEL LIMIT

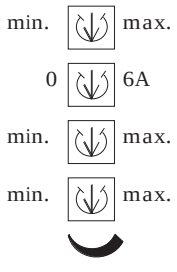

CONNECTIONS

1 MOTOR - (MINUS)
2 SUPPLY VOLTAGE 12 ... 32 V
3 MOTOR + (PLUS)
4 SUPPLY VOLTAGE (GND)
5 CONTROL VOLTAGE 0V (GND)
6 CURRENT LIMIT INPUT
7 DIRECTION CHANGE
8 SPEED CONTROL INPUT
9 SELECTION OF PRESET SPEED (FAST)
10 SELECTION OF PRESET SPEED (SLOW)
11 +5.5 V REFERENCE OUTPUT MAX. 50 mA

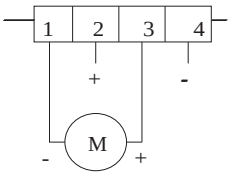

CONNECTION OF MOTOR
AND SUPPLY

SPEED ADJUSTMENT
WITH POTENTIOMETER

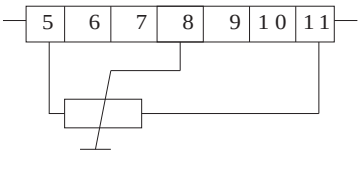

POT 1...10kohm
MAX. SET WITH TRIM P4

SELECTION OF PRESET SPEED
WITH SELECTION CONTACT

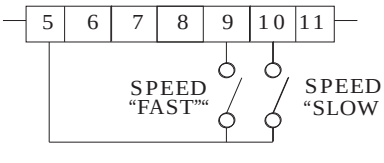

“FAST" IS SET WITH TRIM P4
“SLOW" IS SET WITH TRIM P3

SPEED ADJUSTMENT
WITH VOLTAGE SIGNAL

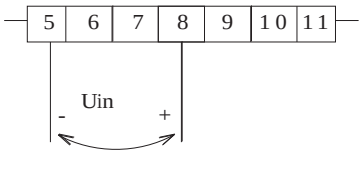

CONTROL 0 ... 5 V
MAX. SET WITH TRIM P4

DIRECTION SHIFT

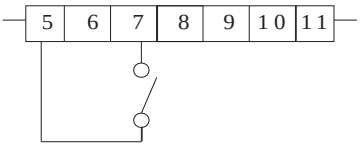

“FORWARD” OPEN OR VOLTAGE > 4 V
“RESVERSE” CLOSE OR VOLTAGE < 2 V

ADJUSTMENT OF TORQUE
(CURRENT) WITH POTENTIOMETER

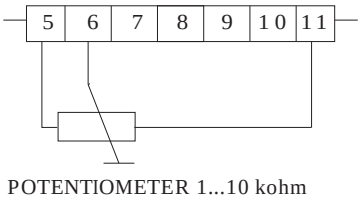

POTENTIOMETER 1...10 kohm
TRIM P2 TO POSITION MIN

ADJUSTMENT OF TORQUE
WITH VOLTAGE SIGNAL

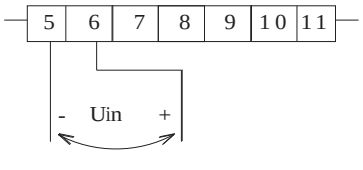

CONTROL 0...5 V
TRIM P2 TO POSITION MIN.

ELECTROMEN Oy Vähäheikkiläntie 56B, 20810 Turku, FINLAND Tel. +358-2-4693050 Fax. +358-2-4693052

EM-67 DC-MOTOR CONTROLLER 24V 3A

FEATURES:

- Direction change
- Braking
- Continuous / 2-step speed control
- Adjustable acceleration / braking ramp
- Adjustable current limit
- Adjustable load compensation
- Supply voltage variation compensated
- High efficiency
- Self recovery fuse
- Rail mountable

EM-67 DC-motor controller is designed for 24V permanent magnet motors with brushes in the power range of 5-70W (0,2-3A). Due to advanced PWM-controlling the unit runs with high efficiency and low thermal loss. The braking energy is fed to a power resistor.

The output voltage of the unit is regulated so that changes in supply voltage won't affect the motor speed. Additionally the unit has RI-compensation, that can be used to minimize motor speed changes in changing loading situations.
The required amount of RI-compensation depends on the motor used and is set with a trim. With this feature, a good motor speed versus control voltage ratio can be reached. Speed adjustment can be made with potentiometer or voltage signal. Alternatively the unit can also be used in two speed mode. In this case the speeds are set with trimmers on the card, and activation is done with switch or control voltage. The unit gives additional 10V for potentiometer and control switches.

Acceleration / braking ramp can be adjusted depending on the situation, this feature gives controlled and smooth direction change. Direction change can be controlled with either switch or control voltage.
The psupply inputos protected against overcurrent and reversed polarity using a self recovery fuse. EM-67 is EMC-tested and meets heavy industry standards.

TECHNICAL DATA:

Supply	20...34 Vdc
Idle current	approx. 40mA
Control voltage	0...5V / 0...10V
Control current	3A rms / 5A mom
Control power	70W rms
Braking power	30W (1/10 duty cycle)
Voltage loss	1V @ Im=3A
Current limit	0.2...5A
Fuse	3A self recovery
Ramp	0.5...10s
Control potentiometer	1...10kohm
Digital control	"on" @ Uin=4...30V
	"off" @ Uin=0...1V or open
EMC-testing	EN 50081-2 & 50082-2
Dimensions	65x72x30mm
Weight	approx. 70g

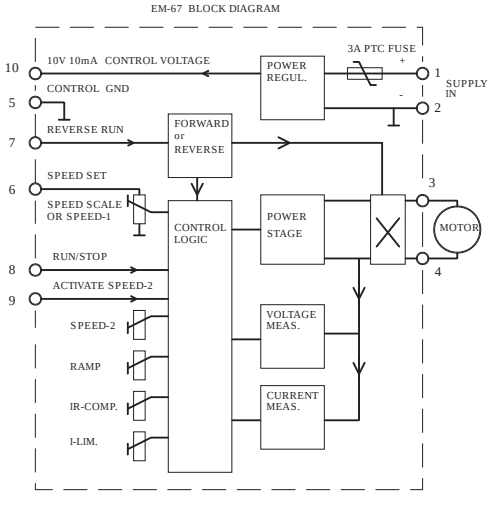

EM-67 OPERATING AND CONNECTION INSTRUCTIONS

Supply voltage must be DC-voltage 20...34V (recommended 26...32V) with less than 20% ripple. At first set all trims to the middle position, except P5 in the minimum position.

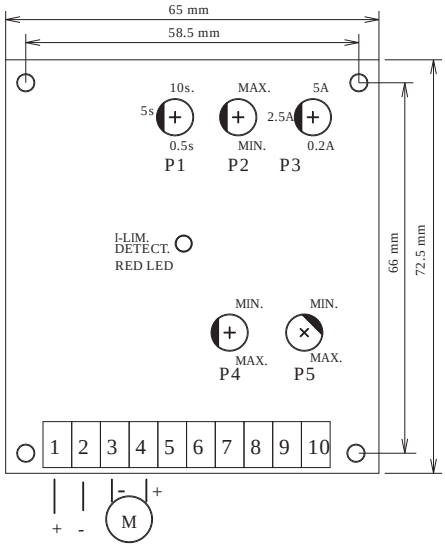

1. Supply 20-34Vdc
2. Supply GND 0V
3. Motor (-)
4. Motor (+)
5. Control GND 0V
6. Speed control input
7. Direction change +run
8. Run / Stop.
9. Switch preset speed2
10. Additional voltage 10V 10mA

ADJUSTMENTS

P1 RAMP
Use trim to set acceleration and braking ramp. Adjustment range is 0.5...10s.

P2 SPEED SET FOR SPEED2
Use trim to change the preset value of speed2. Adjustment range is 0...100%.

P3 CURRENT LIMIT
Use trim to set the maximum current of the motor. A red light indicates the activation of the current limit. Adjustment range is 0.2...5A

P4 CONTROL RANGE
Use trim to set the desired control range. The minimum range is 0...5V and maximum 0...50V. Also used for speed1 without potentiometer.

P5 LOAD COMPENSATION (RI)
Use trim to compensate the load affecting the motor speed. Compensation level can be increased until the motor starts to twitch. Set the initial value to the minimum.

Direction change can be added to following examples if needed. Note that direction change also starts the motor.

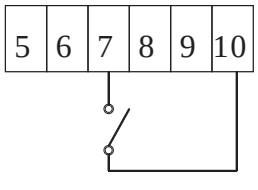

Direction change using control voltage. Can be used with other examples if needed.

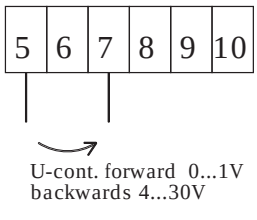

Speed set using potentiometer. Scale range with trim P4.

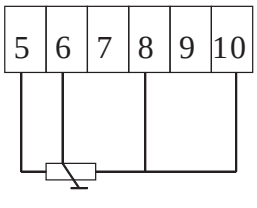

Speed set using potentiometer, activation using run/stop switch.

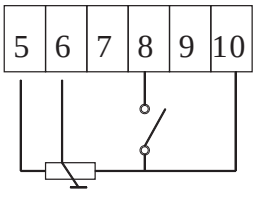

Speed set using voltage signal.

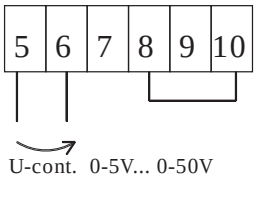

Two speed mode. Speeds are set using trims P2 (pin9) and P4 (pin6). Activation using switches.

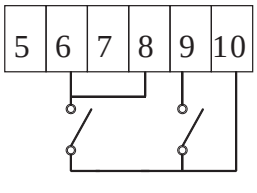

ELECTROMEN Oy Vähäheikkiläntie 56B, 20810 Turku, FINLAND Tel. +358-2-4693050 Fax. +358-2-4693052

EM-75 DC-POWER CONTROLLER 12 - 30V 3A

FEATURES:

- Load regulated adjustments
- Adjustable base level
- Two wire connection
- Small size
- High efficiency > 90 %
- Wide power range 0.5 - 80 W
- EMC -tested (no radio frequency interference)
- Panel mountable

EM-75 is a low voltage DC-power control unit. Unit is connected in series with the load. Load can be any resistive load as light bulbs and resistors, with auxiliary diode even inductive loads as solenoids, valves and motors can be controlled as well. The power is adjusted with pulse ratio method (PWM) which permits high efficiency. The change of load does not have any effect on the adjustments. As an example, if part of the bulb load is turned off it does not effect the brightness of the rest of the light bulbs. This is supposing that the operating voltage does not change. The operating voltage can be DC-voltage or pulsating DC-voltage. The unit can be connected to + or to the - side of the load. The controller can be by-passed for light bulb tests. Power stage is protected against voltage surges, overloads and short circuits. Even the incorrect polarity does not damage the unit. EM-75 causes no interferance on the radio frequency.

TECHNICAL DATA:

Supply	12...30 Vdc
Idle current	< 3 mA
Load capacity	3 A max.
Load	0.5 ... 80 W
Adjustment range	0 ... 98 %
Base level adjustment	0 ... 30 %
Operating frequency	approx. 250 Hz
Efficiency	> 90 %
Oper. ambient temp.	0...60 °C
Dimensions	40*30*30 mm
Weight	60 g

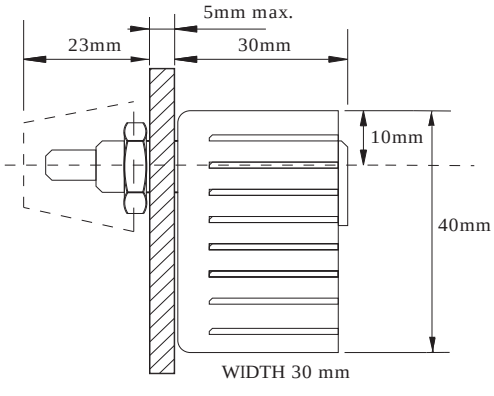

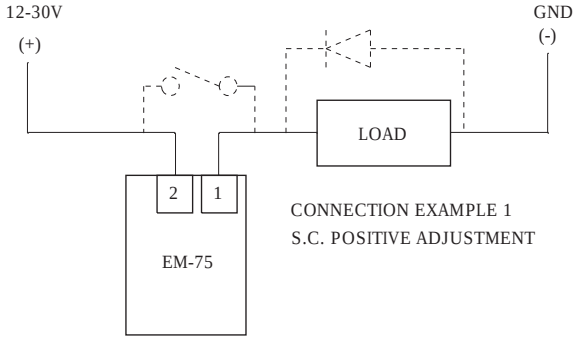

CONNECTION EXAMPLE 1
S.C. POSITIVE ADJUSTMENT

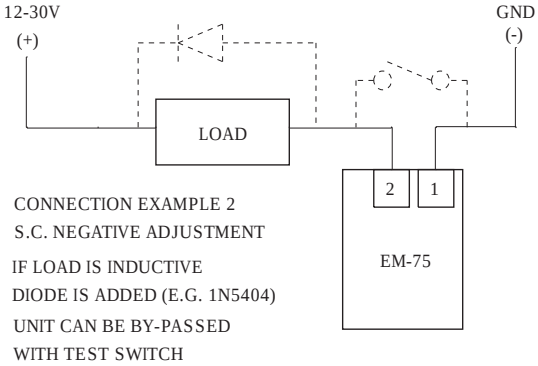

CONNECTION EXAMPLE 2
S.C. NEGATIVE ADJUSTMENT

IF LOAD IS INDUCTIVE
DIODE IS ADDED (E.G. 1N5404)
UNIT CAN BE BY-PASSED
WITH TEST SWITCH

ELECTROMEN Oy Vähäheikkiläntie 56B, 20810 Turku, FINLAND Tel. +358-2-4693050 Fax. +358-2-4693052

EM-76 DC POWER CONTROLLER

FEATURES:

- **Panel mounted**
- **Adjustable initial level**
- **For inductive loads (motor / coils)**
- **Small size**
- **High efficiency >90%**
- **Power range 2-100 W**
- **EMC-tested (CE)**
- **Overload and short circuit protected**

The EM-76 is a panel mounted power controller for DC motors up to 100 Watts with a supply voltage of 12-24 Vdc. In order to achieve high efficiency the PWM principle is used. A suitable supply voltage is filtered DC and where the ripple is less than 20%. If the supply cable is longer than five meters a capacitor close to the regulator is recommended. The max. output power is dependent on the installation i.e. free air or enclosed resulting in amount of heat developed (There are examples in the tech specification). The power is adjusted by the potentiometer on the front, and the initial level set by the trimmer behind the panel. The device is installed through a 10 mm hole and held in place with a nut. The output is protected against spikes, overload and short circuit, it can also withstand reverse polarity as long as the recommended fuse is used. The EM-76 is EMC tested according to the industrial standards EN 50081-2 and EN 50082-2

TECHNICAL DATA

Supply voltage	12-32 Vdc
No load current	< 25m A
Fuse	< T6.3 A
Max output power	3.0 A (installed to plastic panel.)
	3.5 A (free air)
	4.0 A (installed to metal panel.)
Control range	0-99 % (of supply voltage)
Initial level	0-16 %
Output frequency	typ. 21 kHz
Efficiency	> 90 %
Ambient temperature	-10...50 °C
Dimensions (mm)	40 x 33 x 30
Weight	60 g

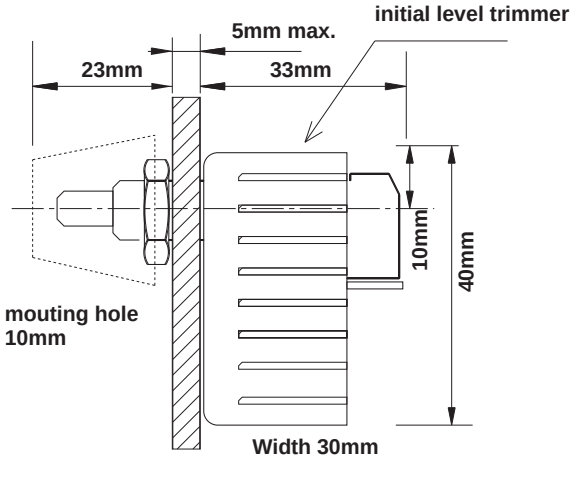

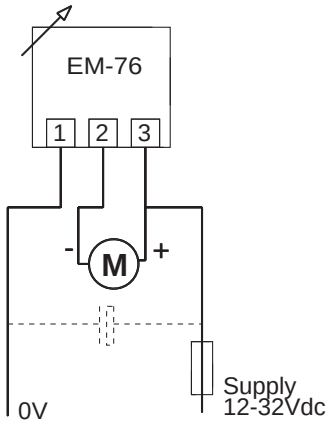

CONNECTION EXAMPLE

-Fuse should be chosen according to the application. Maximum value T6.3A
-If supply cables longer than 5 m the capacitor 220uF 35V close to controller is recommended.

ELECTROMEN Oy Vähäheikkiläntie 56B, 20810 Turku, FINLAND Tel. +358-2-4693050 Fax. +358-2-4693052

EM-101 DC-MOTOR CONTROLLER 24V 3A 4-QUAD

FEATURES:

- 4-quadrant
- Protection with self recovering fuse
- Settable current limit
- Settable acceleration/brake ramp
- Load compensation
- Special braking options
- Supply voltage compensation
- Continuous / 2-step speed controlling
- Positive driving logic
- Mounting with DIN-rail or screws
- High efficiency

EM-101 is designed for modern automation systems. Controls can be performed easily with relay- or open collector-outputs. Analog controls work with positive voltage. Usable motor can be permanent magnet motor with brushes in power range of 5 ... 70 W. Due to the advanced pulse control (PWM) the unit operates with high efficiency, low temperature losses and provides a high starting torque.
Loading of the motor can be compensated with inbuilt RI-adjustment. The current, or in other words, the torque of the motor can be controlled with DIP-switch. The operation of the current limit is indicated with a red led.
There are a variety of braking options available in this device. For most effective braking “reverse braking”-mode can be used. In this mode reversed driving is used for braking, which effects extremely fast function. Additionally the card utilises short circuit braking which short circuits the motor circuit during the braking.
EM-101 also has inbuild settable time acceleration- and braking ramps.

TECHNICAL DATA EM-101

Supply voltage	20-34Vdc
Over voltage protection	36V
Idle current	app. 50mA
Control current	3A, mom. 4A
Control power	70W
Current limit	0,2...4.2A
Voltage loss	1V when Im=3A
Fuse	3A, self recovery
Ramp	0,5s...5s
Control voltage	0-5V, 0-10V
Control pot.meter	2...10kohm
Digital control	“on” when Uin 4-30V
	“off” when Uin=0-1V or NC
Dimensions	89x73x26
Weight	app. 70g

EM-101 BLOCK DIAGRAM

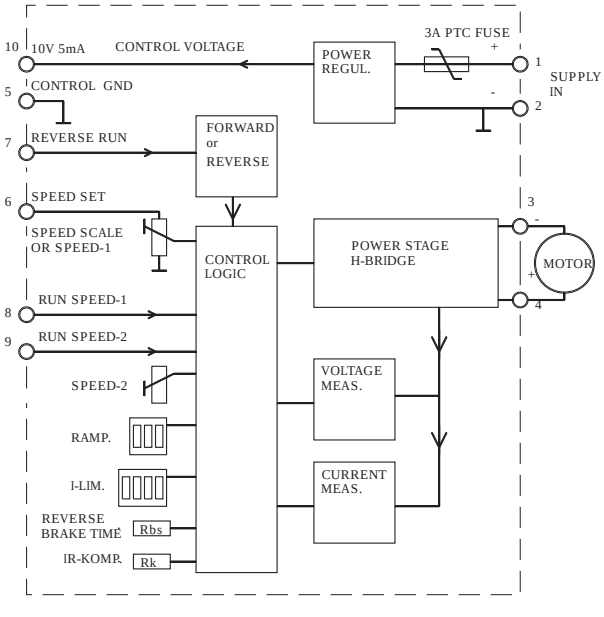

EM-101 INSTRUCTIONS

Supply voltage must be DC with ripple less than 20%. Supply voltage 20...34V (26...32V recommended). In the beginning set all trimmers in the middle position.

NOTE! When reversed braking is used the controller will take a very high current peak. Capacitor for the power supply should be at least 4700uF at 1A.

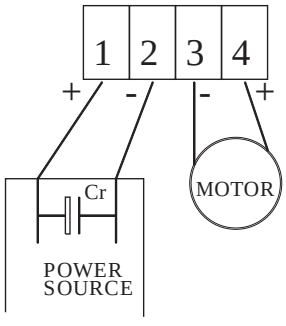

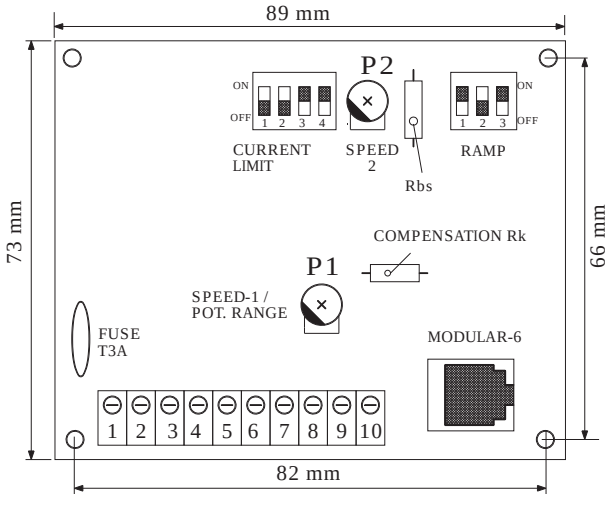

CONNECTORS:

1. Supply voltage 20-34Vdc
2. Supply voltage GND 0V
3. Motor (-)
4. Motor (+)
5. Control GND
6. Controlling voltage
7. Reverse/driving direction
8. Run speed1 (potentiometer)
9. Run speed2
10. Helping voltage for potentiometer (10V, 5mA)

MODULAR-6 CONNECTOR

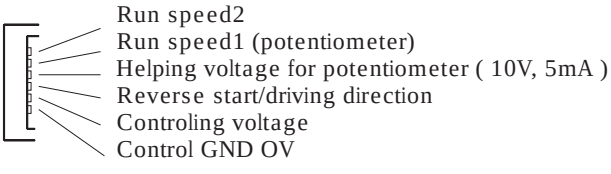

THE CURRENT LIMIT

Limitation of the current (torque)
Controlled with DIP-switches

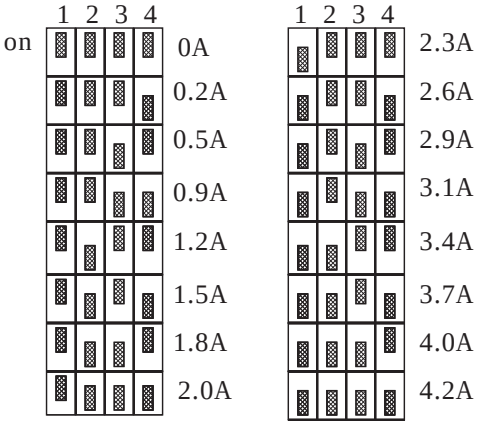

THE COMPENSATION

With compensation you can compensate the load effect to motor rpm. This feature increases controlling if current increases in the motor circuit. The need for compensation depends on application and motor. Typically small motors require more compensation than big ones. Over compensation occurs as twiching of the motor.

Example:
The smaller resistor the bigger compensation.
Typical settings: motor < 10W Rk= 50...500ohm
motor > 10W Rk= 200...2000ohm

THE RAMP & BRAKING

In the map below the first two ramp settings are special braking options. The first position is so called reverse braking; the motor is controlled in opposite direction. Reverse braking time is set with resistor (rbs). The second position is so called short circuit braking where the motor circuit is short circuited during the braking. Other positions are for normal acceleration and braking settings which are set with DIP-switches.

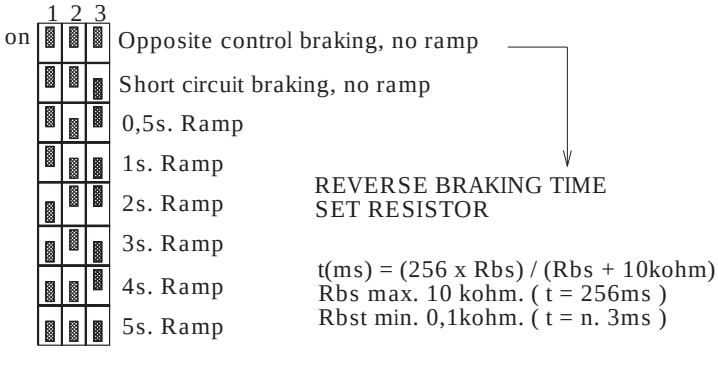

THE CONTROLLING

The max value of controlling voltage ranges 5...10V. The full range is thus maintained on 0...5V. The range can be set with trim P1. When driving with double speed controlling (run / set) the driving speed is set with trim P1 and the setting speed with trim P2.

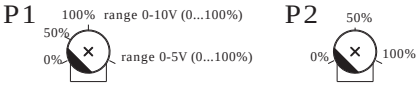

EM-101 CONNECTION EXAMPLES

Direction change
/reverse drive.

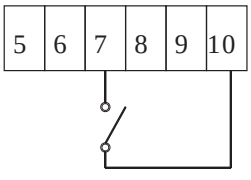

Direction change/reverse drive
with voltage.

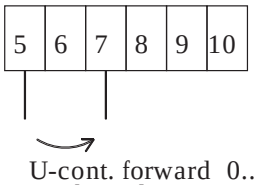

U-cont. forward 0...1V
Backward 4...30V

Speed adjustment with pot.meter.
Range scaling with trim P1.

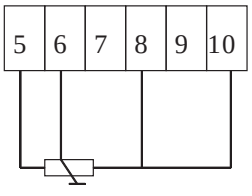

Speed control with pot.meter,
activate with run speed1-
switch.

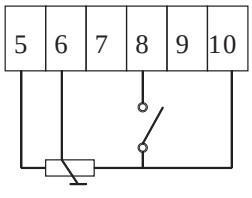

Speed control with voltage
signal.
Range scale with trim P1.

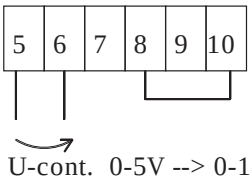

U-cont. 0-5V --> 0-10V

Double speed control.
Speeds set with trimmers
P2 (s2, pin9) and P1
(s1,pin6)
Activate with switches.

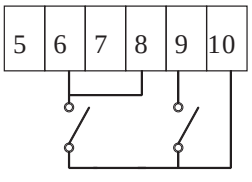

EM-101-BI MOTOR CONTROLLER 24V 4A 4-QUAD

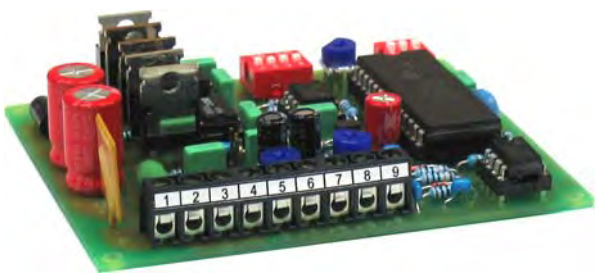

FEATURES

- 4 Quadrants
- Self recovery fuse
- Adjustable current limit
- Adjustable accel./braking ramp
- Load compensation
- Special braking options
- Supply voltage compensation
- Speed control ±10V (±5V)
- Positive control logic
- Mounting with DIN-rail or screws
- High efficiency

EM-101-BI is designed for modern automation systems. Controls can be performed easily with relay- or open collector outputs. Analog controls work with ±10V voltage. Usable motor can be permanent magnet motor with brushes in power range of 5...80 W. Due to the advanced pulse control (PWM) the unit operates with high efficiency, low temperature losses and provides a high starting torque.
Loading of the motor can be compensated with inbuilt RI-adjustment. The current, or in other words, the torque of the motor can be controlled with DIP-switch. The operation of the current limit is indicated with a red led.
There are a variety of braking options available in this device. For most effective braking “reverse braking”-mode can be used. In this mode reversed driving is used for braking, which effects extremely fast function. Additionally the card utilises short circuit braking which short circuits the motor circuit during the braking.
EM-101 also has inbuild settable time acceleration- and braking ramps.

TECHNICAL DATA

Supply	12-34Vdc
Over volt. protect.	36V
Idle current	approx. 50mA
Control current	4A continuous, 5A max.
Control power	80W continuous
Motor voltage	0-15V (12V range)
	0-29V (24V range)
Current limit	0.3...5A
Voltage loss	1V when Im=4A
Fuse	4A self recovery.
Ramp	0,5s...5s
Control voltage	-5...0...5V -->-10...0...10V
Control pot.	2...10kohm
Digital cont.	"on" when Uin 4 -30V
	"off" when Uin 0-1V or open
Dimensions	89x73x26mm
Weight	approx. 70g

EM-101-BI BLOCK DIAGRAM

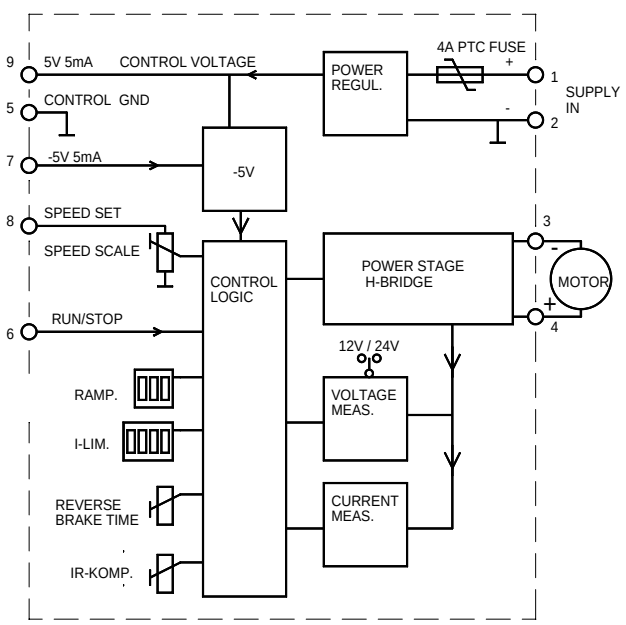

OPERATING INSTRUCTIONS EM-101-BI

Supply voltage must be DC with ripple less than 20%. Supply voltage 12...34V. In the beginning set all trimmers as shown in lay-out picture. Choose 12 / 24 according to the supply used.

NOTE! When reversed braking is used the controller will take a very high current peak. Capacitor for the power supply should be at least 4700uF at 1A.

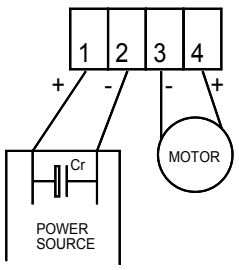

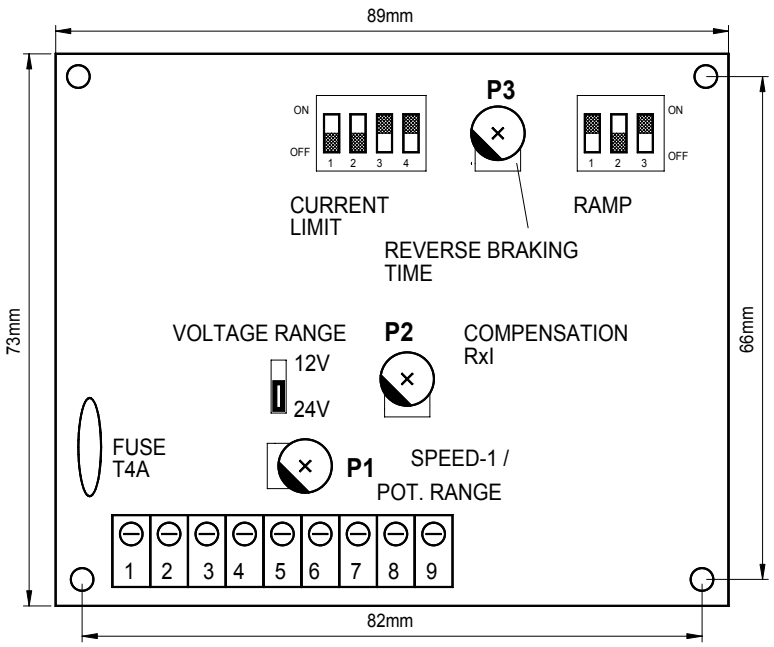

CONNECTORS

1. Supply 12-34Vdc
2. Supply GND 0V
3. Motor (-)
4. Motor (+)
5. Control GND 0V
6. Run / (Stop)
7. -5V Aux. voltage out (5mA)
8. Reference voltage in
9. +5 Reference out (5mA)

CURRENT LIMIT
Limitation of the current (torque)
Controlled with DIP-switches.

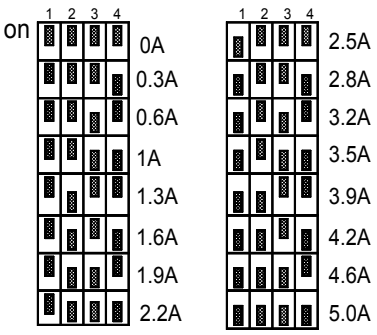

THE RAMP & BRAKING
In the map below the first two ramp settings are special braking options. The first position is so called reverse braking; the motor is controlled in opposite direction. Reverse braking time is set with trim P3. braking where the motor circuit is short circuited during the braking. Other positions are for normal acceleration and braking settings which are set with DIP-switches.

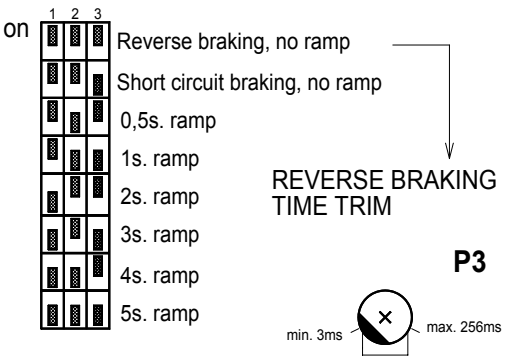

COMPENSATION
With compensation you can compensate the load effect to motor rpm. This feature increases controlling if current increases in the motor circuit. The need for compensation depends on application and motor. Typically small motors require more compensation than big ones. Over compensation occurs as twiching of the motor.

CONTROLLING
The max value of controlling voltage ranges ±(5...10V). The full range is thus maintained on 0...5V. The range can be set with trim P1.

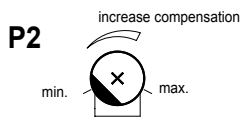

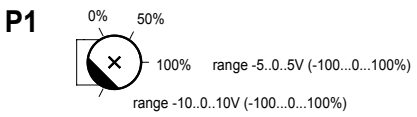

EM-101 CONNECTION EXAMPLES

One direction drive.
Speed adjustment with potentiometer.

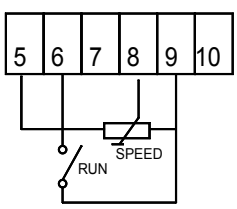

Two direction drive.
Speed and direction control with potentiometer.

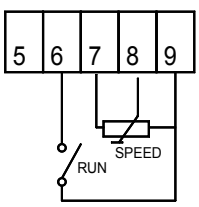

Two direction drive with voltage signal.
Run continuous on.

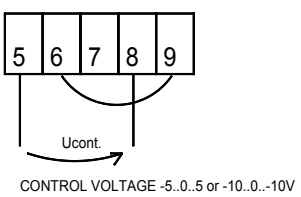

Two direction drive with switch.
Run continuous on.

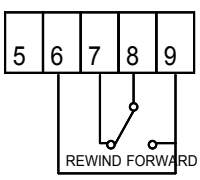

Two direction drive with switch.
Speed with external potentiometer.
Run continuous on.

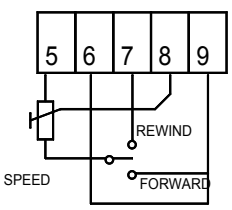

Two direction drive with voltage signal,
run with voltage control.

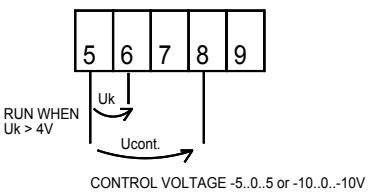

EM-106A BRUSHLESS DC-MOTOR CONTROL UNIT 12-24V 7A

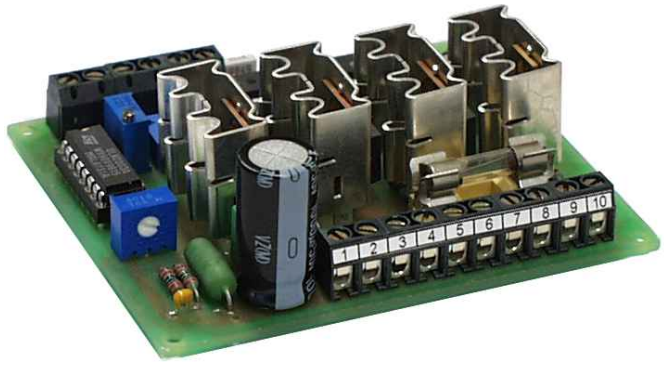

FEATURES:

- Three phase output
- Direction change
- Hall-transducer supply and input
- Supports 60° and 120° commuting
- Adjustable current limit
- Direct or freq.locked driving
- High efficiency
- Inbuilt fuse
- Rail mounting base available
- Compatible with EM-106
- Improved current limit behavior

EM-106A controller is designed for brushless hall-feedback DC-motors. The device uses mosfet-type power stage with high efficiency. EM-106A can be connected to 60- or 120 degrees commuting motor. Standard driving includes speed adjustment, stopping, direction change and braking. The controller can be installed using screws or a standard rail mounting base.
There are two control modes: Within direct driving mode the motor voltage is set in proportion to the control voltage as with a normal DC-motor. Alternatively in frequency locked mode the controller uses the hall-transducer signal to speed adjustment besides commuting. This mode gives very precise speed referenced to the control voltage. As an additional feature the controller has an adjustment for loop response so that it provides as stable control as possible within all applications. Control input can be scaled with a trim.
The current limit is set with a trim, it restricts driving when motor current exceeds the given value. The controller is protected against reversed input voltage polarity and fuse protected against over current.

TECHNICAL DATA:

Supply voltage	12…36 Vdc
Idle current	approx. 30 mA
Motor current	7 A cont.
	10A 50/50%
Current limit	0-10 A adjustable
Voltage loss /V	0,8 V (Im=7 A)
Control voltage	0…10 V
Control pot.	2…10k
Control input	10 V max (20 mA)
Hall-input	6,5 V
Digital control	“on” at Uin 3…30 V
	“off” at Uin 0…1 V or open
Dimensions	87*73*35 mm
Weight	approx. 90 g
Operating temp.	0…50°C

EM-106A BLOCK DIAGRAM

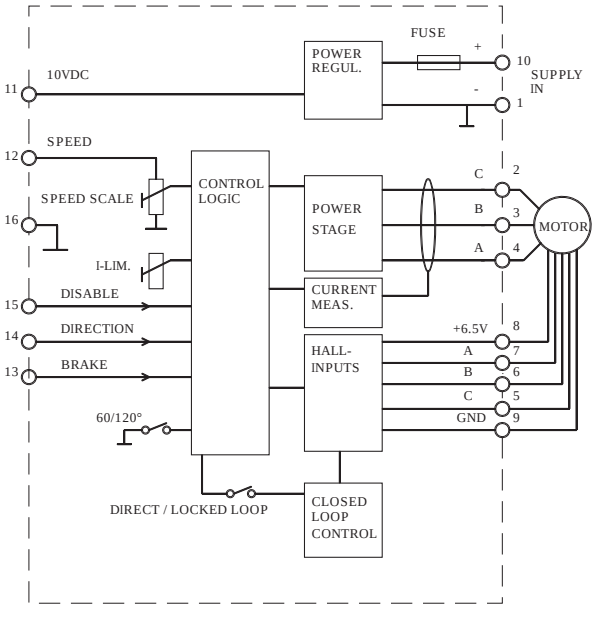

EM-106A OPERATING INSTRUCTIONS

Operating voltage 12-36V filtered, less than 20% ripple.

Speed control set with voltage or potentiometer. Range is adjustable with SCALE and ZERO trim.
Speed control mode NORMAL or CLOSED LOOP is selected with SW1.

Normal speed control: Motor acts like normal DC-motor without feedback.
Closed loop control: The control unit uses a hall sensor signal to regulate motor speed.
Accuracy of motor rpm is typically ±1% in this mode.
The desired rpm range in closed loop mode is selected with SW3.
Synchro control: A SYNCHRO OUT feature can be used if phase locking loop (PLL) control (clock accuracy, frequency control) is needed. This control mode needs external PLL-unit.

Current limit adjust (I-LIM) limits the motor current (torque).
Commutation phase of motor is selected with SW2.

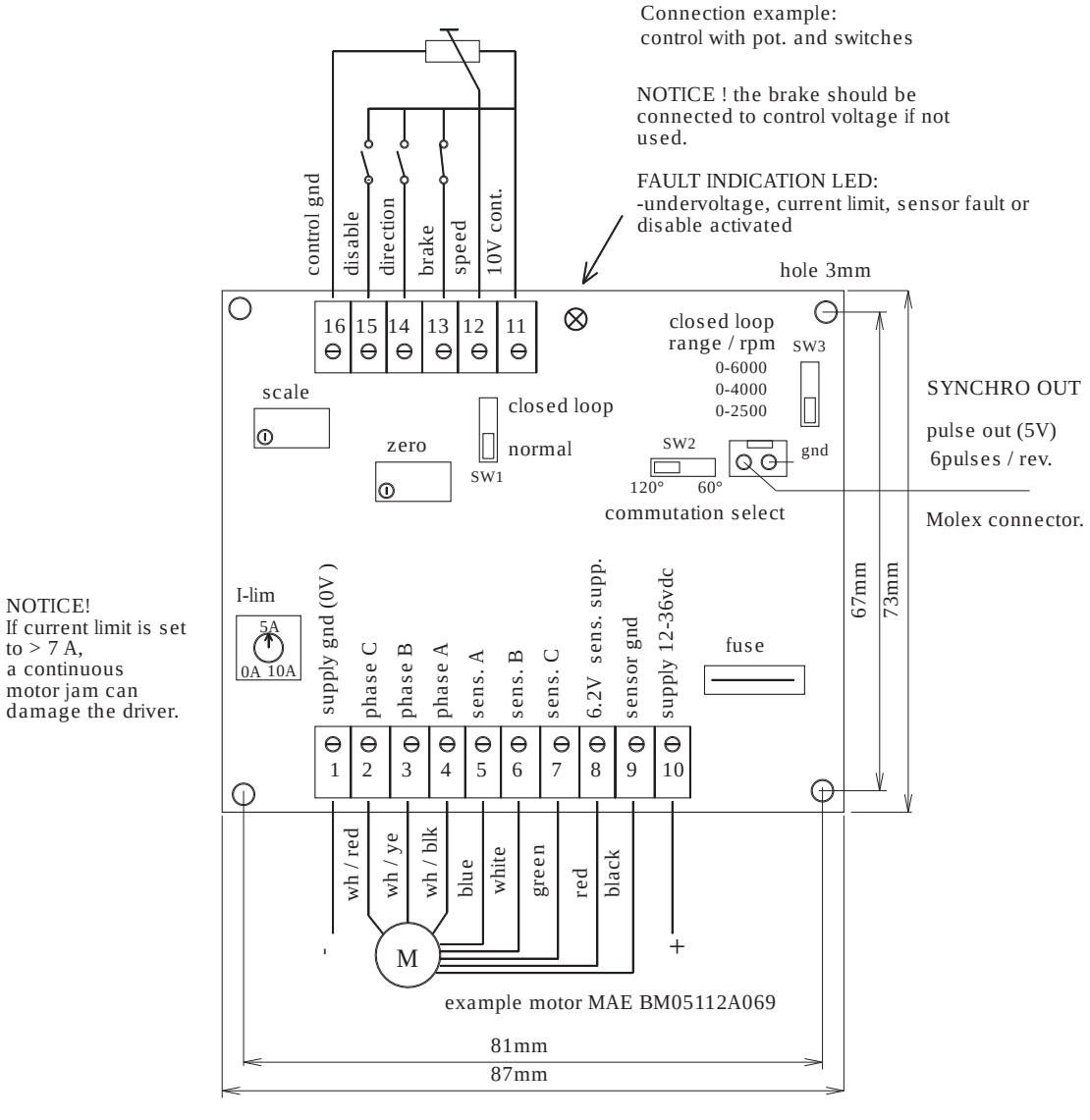

ELECTROMEN Oy Vähäheikkiläntie 56B, 20810 Turku, FINLAND Tel. +358-2-4693050 Fax. +358-2-4693052

EM-115 DC-MOTOR CONTROL UNIT 12-36V 25A 4-QUAD.

FEATURES:

- Small size
- Four quadrant drive
- High efficiency >92%
- Motor range 50-500W
- Rail mounting base fittable
- Adjustable current limit
- Adjustable ramp

EM-115 motor control unit is designed for big permanent magnet DC-motors. The power control is done with PWM method (Pulse Width Modulation). This facilitates high efficiency and small temperature losses. Thanks to a high switching frequency the unit operates quietly. A battery or a filtered DC-supply will do as a power source.
The maximum output given by the unit depends on the installation. When operating at maximum power output sufficient air ventilation has to be taken care of. The unit operates in 4-quadrants so it drives and brakes in both directions. The braking is done with regenerative way feeding braking energy back to power supply. When a battery is not used as a power source the braking energy will be fed to the internal resistance of the motor. The motor rpm can be set either with potentiometer, trim or external voltage signal. The output acceleration ramp and current limit are set with trims, the current limit is indicated with a red LED. A load affecting the motor rpm can be eliminated with a compensation trim. The power stage is protected against voltage peaks, overload and temporary shortcuts. Even the incorrect polarity does not damage the unit as long as a fuse of recommended value is used.

TECHNICAL DATA:

Supply voltage	12...36 Vdc
Idle current	< 50mA
Recommended fuse	5-30A
Control potentiometer	1k..50k
Load capacity	25A RMS
	50A mom. (5s)
Motor voltage	0-30V
Control voltage range	from 0-5V to 0-10V
Voltage loss /V	<1V when Im=25A
Current limit	4..50A
Operating frequency	approx. 21kHz
Ramp time	0.3..10s
On / Off control	>4V “on”
	<1V “off”
Input impedance	pins 6,7 and 8 = 10kohm
	pin 9 = 100kohm
Efficiency	>92%
Operating temp.	-10..50 °C
Dimensions	107*107*45 mm
Weight	approx. 270 g

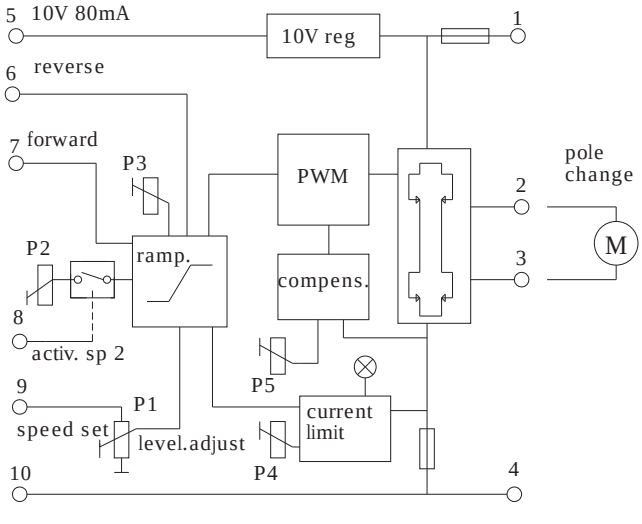

EM-115 OPERATING AND CONNECTING INSTRUCTIONS

IMPORTANT!

Check polarity before connecting!
Use filtered 12-36VDC (ripple <20%)
as operating voltage.

When motor current constantly exceeds 20A,
proper air ventilation must be taken care of.
Ambient temperature should not be over 50°C.

CONTROLS

P1-maximum level.
Use to set maximum level. This is also
the speed set for speed-1 in 2-step speed mode.

P2-speed-2
When using 2-step speed mode use P2 to
set speed-2.

P3-acceleration / braking ramp
Use ramp adj. to obtain smooth
starting and running. The right value
can be found just by testing the set.

P4-current limit
The operation of the current limit is indicated
by a red LED next to the trim. Use it to set the
desired maximum current to the motor, in other
words max. torque.

P5-compensation
Use this trim to compensate the load affecting
the motor rpm. Set the motor rpm to approx.
50%, adjust ccw until the motor starts to twitch,
then adjust carefully backwards till the twitching ends.

FUSE

The fuse type is ATO 5-30A, according to
the application.

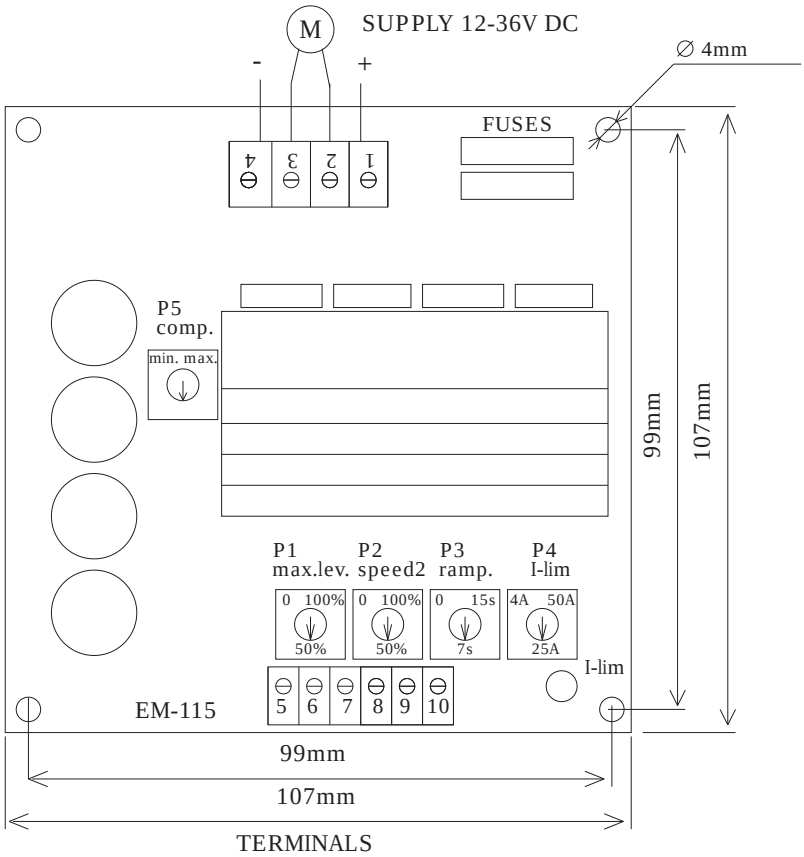

TERMINALS

1. Supply voltage 12-36V
2. Motor out +
3. Motor out -
4. Supply voltage 0V gnd

5. Control voltage approx. 10V 80mA
6. Reverse (master)
7. Forward
8. Speed-2 activation
9. Control input (U / pot.)
10. Signal 0V gnd

Continuous rpm control,
set with pot.meter, adjust
range with P1.
Switch to forward.
Switch to change direction.

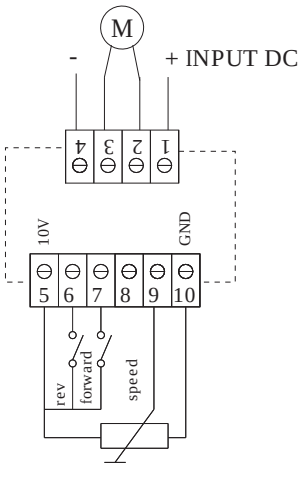

2-step speed mode
(run / positioning)
P1-speed1, P2-speed2
Activation with speed1
& speed2.

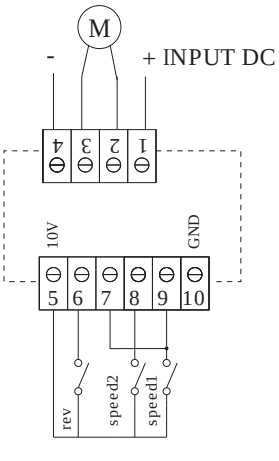

Continuous rpm control,
set with voltage, adjust
range with trim P1.
Reverse and forward with
TTL, CMOS or 0-24V signal.

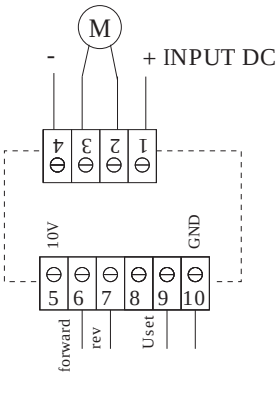

Forward, OFF 0-1V, ON 4-30V
Reverse, OFF 0-1V, ON 4-30V
Speed (Uset) 0-5V to 0-10V = 0-100%

ELECTROMEN Oy Vähäheikkiläntie 56B, 20810 Turku, FINLAND Tel. +358-2-4693050 Fax. +358-2-4693052

EM-115-48 DC-MOTOR CONTROL UNIT 20-60V 25A 4-QUAD.

FEATURES:

- Small size
- Four quadrant drive
- High efficiency >92%
- Motor range 50-500W
- Rail mounting base fittable
- Adjustable current limit
- Adjustable ramp

EM-115-48 motor control unit is designed for big permanent magnet DC-motors. The power control is done with PWM method (Pulse Width Modulation). This facilitates high efficiency and small temperature losses. Thanks to a high switching frequency the unit operates quietly. A battery or a filtered DC-supply will do as a power source.
The maximum output given by the unit depends on the installation. When operating at maximum power output sufficient air ventilation has to be taken care of. The unit operates in 4-quadrants so it drives and brakes in both directions. The braking is done with regenerative way feeding braking energy back to power supply. When a battery is not used as a power source the braking energy will be fed to the internal resistance of the motor. The motor rpm can be set either with potentiometer, trim or external voltage signal. The output acceleration ramp and current limit are set with trims, the current limit is indicated with a red LED. A load affecting the motor rpm can be eliminated with a compensation trim. The power stage is protected against voltage peaks, overload and temporary shortcuts. Even the incorrect polarity does not damage the unit as long as a fuse of recommended value is used.

TECHNICAL DATA:

Supply voltage	20...60 Vdc
Idle current	< 50mA
Recommended fuse	5-30A
Control potentiometer	1k..50k
Load capacity	25A RMS
	50A mom. (5s)
Motor voltage	0-58V
Control voltage range	from 0-5V to 0-10V
Voltage loss /V	<0.5V when Im=30A
Current limit	4..50A
Operating frequency	approx. 21kHz
Ramp time	0.3..10s
On / Off control	>4V “on”
	<1V “off”
Input impedance	pins 6,7 and 8 = 10kohm
	pin 9 = 100kohm
Efficiency	>92%
Operating temp.	-10..50 °C
Dimensions	107*107*45 mm
Weight	approx. 270 g

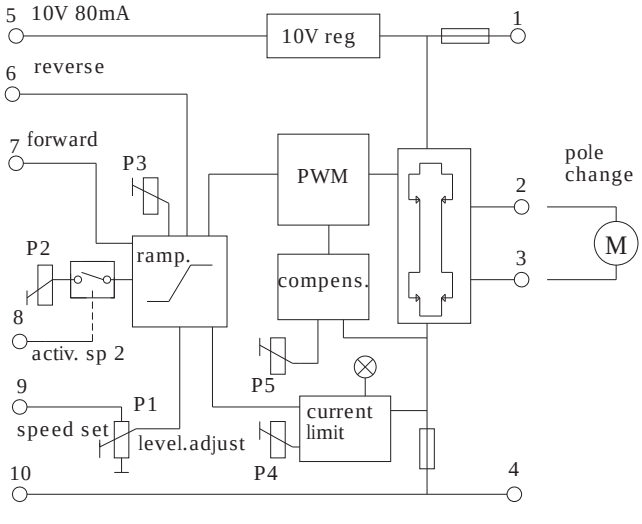

EM-115-48 OPERATING AND CONNECTING INSTRUCTIONS

IMPORTANT!

Check polarity before connecting!
Use filtered 20-60VDC (ripple <20%)
as operating voltage.

When motor current constantly exceeds 10A,
proper air ventilation must be taken care of.
Ambient temperature should not be over 50°C.

CONTROLS

P1-maximum level.
Use to set maximum level. This is also
the speed set for speed-1 in 2-step speed mode.

P2-speed-2
When using 2-step speed mode use P2 to
set speed-2.

P3-acceleration / braking ramp
Use ramp adj. to obtain smooth
starting and running. The right value
can be found just by testing the set.

P4-current limit
The operation of the current limit is indicated
by a red LED next to the trim. Use it to set the
desired maximum current to the motor, in other
words max. torque.

P5-compensation
Use this trim to compensate the load affecting
the motor rpm. Set the motor rpm to approx.
50%, adjust ccw until the motor starts to twitch,
then adjust carefully backwards till the twitching ends.

FUSE

The fuse type is ATO 5-30A, according to
the application.

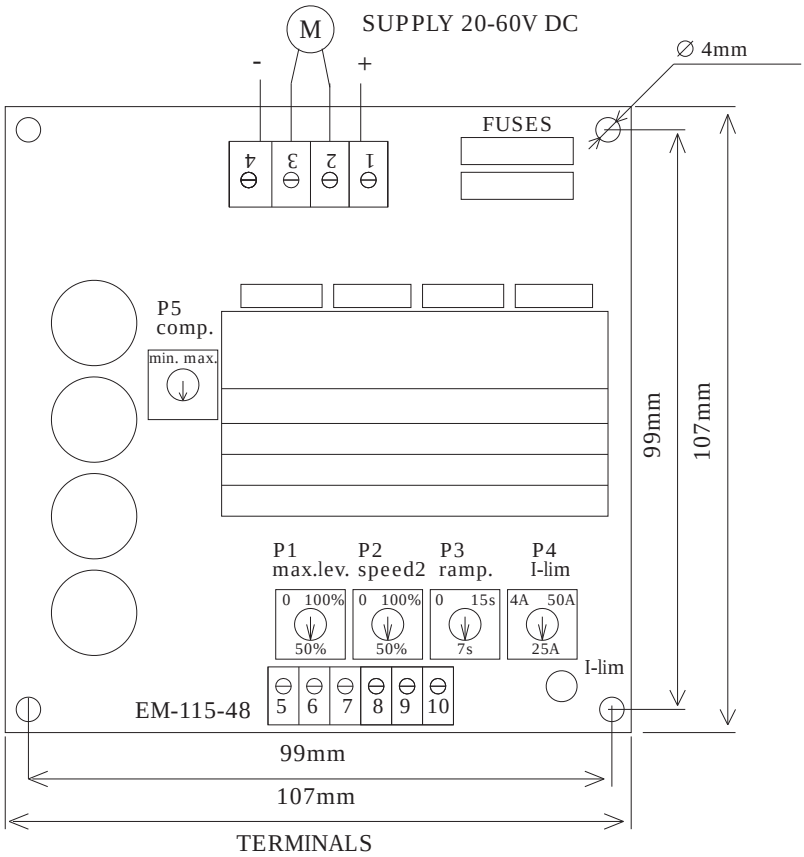

TERMINALS

1. Supply voltage 20-60V
2. Motor out +
3. Motor out -
4. Supply voltage 0V gnd

5. Control voltage approx. 10V 80mA
6. Reverse (master)
7. Forward
8. Speed-2 activation
9. Control input (U / pot.)
10. Signal 0V gnd

Continuous rpm control,
set with pot.meter, adjust
range with P1.
Switch to forward.
Switch to change direction.

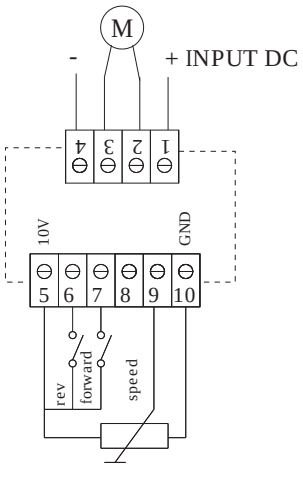

2-step speed mode
(run / positioning)
P1-speed1, P2-speed2
Activation with speed1
& speed2.

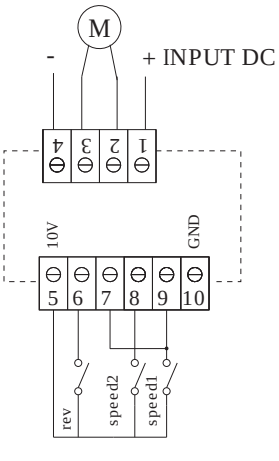

Continuous rpm control,
set with voltage, adjust
range with trim P1.
Reverse and forward with
TTL, CMOS or 0-24V signal.

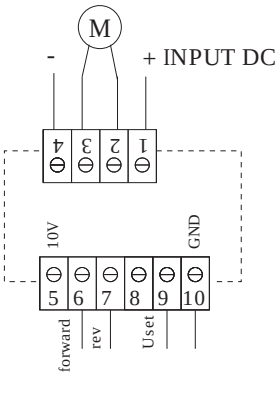

Forward, OFF 0-1V, ON 4-30V
Reverse, OFF 0-1V, ON 4-30V
Speed (Uset) 0-5V to 0-10V = 0-100%

ELECTROMEN Oy Vähäheikkiläntie 56B, 20810 Turku, FINLAND Tel. +358-2-4693050 Fax. +358-2-4693052

EM-136 STEPPER MOTOR MICROSTEPPING CONTROLLER UNIT 12-45V 0.5-4A

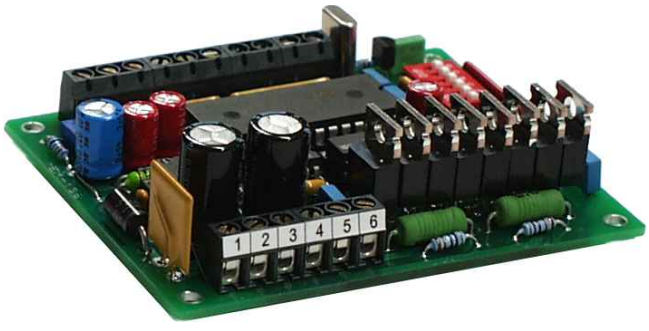

FEATURES:

- Bipolar chopper
- Wide supply voltage range
- Full-, half-, quarter-, and 1/8-step operation
- 8-programmable phase currents
- Auxiliary oscillator
- Acceleration- and braking ramp
- Self recovery fuse
- Very high efficiency
- Low heat dissipation
- Rail mounting base available

EM-136 is bipolar-chopper type stepper motor controller. Bipolar operation suits most stepper motors and provides the best torque. The microstepping feature gives high performance also at low rpm. The power stage is mosfet-type so it runs with very high efficiency.

There are four stepping modes: full, half, quarter and 1/8. Desired mode is set with two control inputs. The phase current (current limit) can be set in eight different levels using dip-switches.
A wide phase current set range makes it possible to use the device with several different motors.

The controller features an auxiliary oscillator, which has 7 preprogrammed frequencies. The frequency is set with three control inputs. Auxililary oscillator in EM-136 has also an acceleration ramp feature, which can be used to change frequencies flexibly, so that the motor will start up reliably even at high frequencies. The acceleration ramp time is set with a trim.

The inputs operate with so called positive logic, in other words the inputs are activated with connecting the input to positive voltage. The inputs also work with TTL-logic level control.

The power state of EM-136 has self recovery fuse that protects the controller from over current and reversed input voltage polarity.

TECHNICAL DATA:

Operating voltage	12-45Vdc
Idle current	approx. 25mA (enable "0")
Current set	0.5; 1,0; 1.5; 2.0; 2.5; 3.0; 3,5 and 4.0A
Voltage loss	1V when Im=1A
Fuse	4A self recovery.
Aux. osc. freq.	200, 500, 1000, 2000 Hz 3000, 5000, 8000 Hz
Ramp speed	0,2...3s (0...8000 Hz)
Aux. freq. precision	better than 0,5%
Digital control	"on" when Uin 4 -30V "off" when Uin 0-1V
Step freq.	max. 15 kHz
Operating temp.	0-50°C
Dimensions	87x73x35mm
Weight	approx. 90g

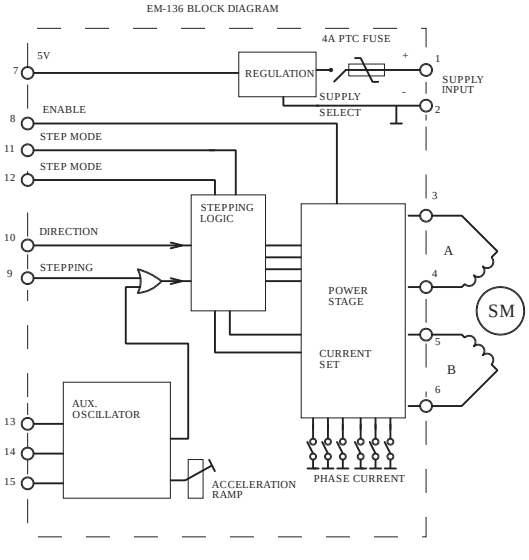

EM-136 WIRING AND INSTALLATION

Supply voltage 12-45Vdc, ripple less than 20%
Make sure that the current feed capability of the voltage source is adequate for the application.
The undervoltage situation can cause undesired effects for the function.

The phase current is set with PHASE CURRENT switch (see the table below). Notice that the motor do not always need the nominal phase current. Often the motor works better with lower than the nominal current. Find the best current for your application, but do not exceed the nominal current of the motor.

Control inputs are activated using switches or voltage signal. Driver has a positive control logic 5...30V = "on" , 0-1V or OPEN = "off"

There are four stepping modes : full, half, 1/4 and 1/8. The full-step is good for higher speeds. The 1/8-step gives best resolution on positioning use, and also the smoothest run on low speeds. Stepping mode is selected with STEP MODE inputs A & B (look at table below).

If used with external stepping frequency source, connect frequency signal to STEP PULSE input. Incoming pulse level should be 4-30V, frequency max.15kHz and minimum pulse lenght 25us.
Internal stepping source (aux. oscillator) is set with AUX. OSC. inputs 1,2 and 3 (see the table).
Aux. oscillator includes also the acceleration RAMP. It gives a smooth start towards the selected frequency. The ramp time can be adjusted from 0.2 to 3sec.
The AUX. OSC. frequencies and the RAMP time are based on 20MHz crystal frecuency. The chrystal can be changed to be anything between 4...20MHz.
The AUX. OSC. frequencies and ramp time are changed in the same proportion.

ENABLE has the highest priority.
NOTE. If ENABLE input is "off" the output stage is turned off, (output current is off) and also the AUX. OSC is reset. So every time when the ENABLE input is turned "on" the AUX. OSC. starts with the acceleration ramp.

DIRECTION input is used to change the rotating direction. Direction change does not include the RAMP function in it self. But if it is used with the ENABLE input the ramp and the smooth direction change can be achieved.

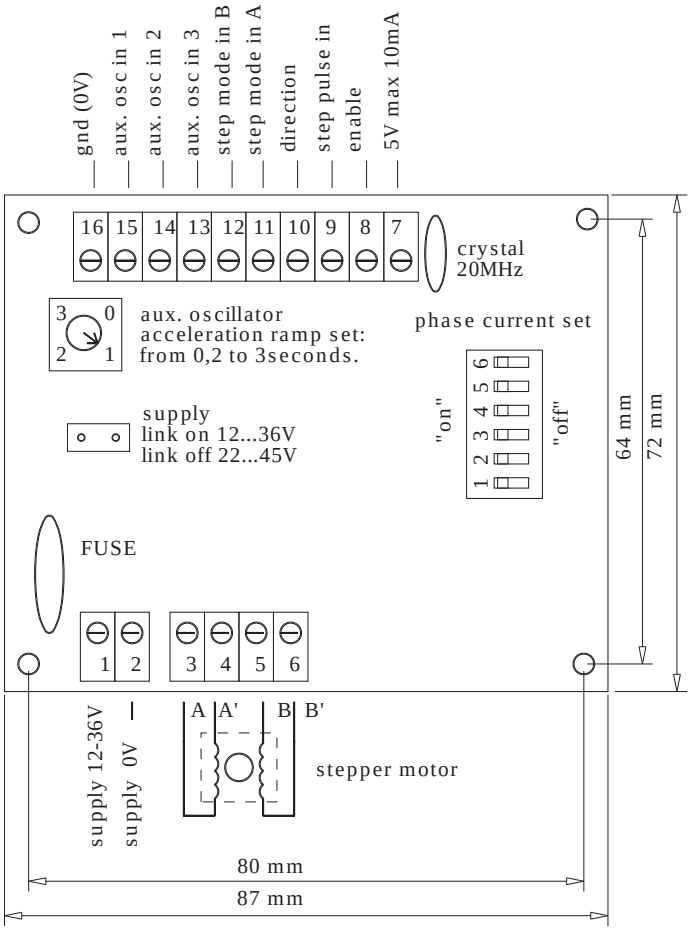

STEP MODE SET

full step: input A and B "off"
half step: input A "on", B "off"
1/4 step: input A "off", B"on"
1/8 step: input A and B "on"

PHASE CURRENT SET

0.5A all "off"
1.0A 1 and 4 "on", others "off"
1.5A 2 and 5 "on", others "off"
2.0A 1,2,4,5 "on", others "off"
2.5A 3 and 6 "on", others "off"
3.0A 1,3,4,6 "on", others "off"
3.5A 2,3,5,6 "on", others "off"
4.0A all "on"

AUX. OSCILLATOR FREQ.
(with 20MHz crystal)

stop all aux. osc. input "off"
200Hz in1 "on", others "off"
500Hz in2 "on", others "off"
1000Hz in1,2 "on", others "off"
2000Hz in3 "on", others "off"
3000Hz in1,3 "on", others "off"
5000Hz in2,3 "on", others "off"
8000Hz all aux. osc. input "on"

ELECTROMEN Oy Vähäheikkiläntie 56B, 20810 Turku, FINLAND Tel. +358-2-4693050 Fax. +358-2-4693052

EM-140A DC-MOTOR STARTER 12-24V 8A

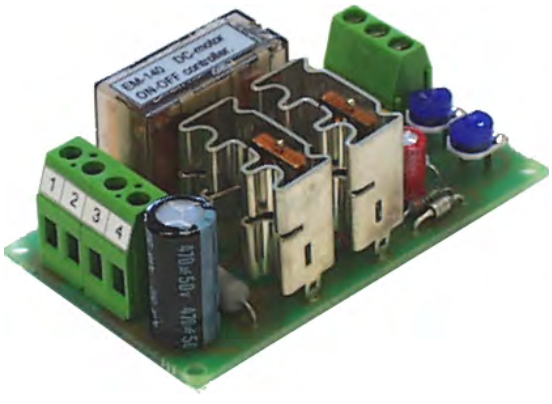

FEATURES

- Controlled direction change
- Soft startup, ramp
- Trip or continuous current limit mode
- Settable current limit
- High efficiency
- High momentary load capasity
- Rail mounting base fittable
- Current limit indication
- Replaces models EM-140, EM-140-12 and EM-140ind

EM-140A DC-motor controller is designed for DC-motor on-off driving with direction change. The unit has an advanced current limit feature, that limits motor current in startup and jam-situation and in that way protects the motor and mechanics.

As the controller starts up in chosen direction, the startup speed can be limited with a so called ramp, thus full voltage isn't instantly lead to the motor but slowly risen through the ramp. The ramp time is set with a trim. When direction is changed the unit relay doesn't instantly change state but first drives control to zero and then waits for a while before driving in new direction. This feature protects the relay and the motor. The current limit works in two ways: the actual current limit is allways enabled and limits controlling if the current exceeds the preset value. Additionally a trip-feature is included, this will shut down control when the current limit is exceeded. After this the unit will startup only with reverse control, with double current limit for 0,3 s.

TECHNICAL DATA:

Supply	11...35 Vdc
Idle current	approx. 30mA
Control current	8A rms 10A 50/50%
Current limit	1...10A 2...20A @ startup
Indication output	NPN open collector 50mA max
Current trip delay	approx. 2ms
Startup delay	10ms
Braking delay	5ms
Dir. change delay	approx. 200ms
Voltage loss	0,5V @ Im=8A
Operating frequency	500Hz
Ramp	0, 10, 20, 40, 80, 150ms 0,25; 0,5; 1s
Digital control	“off” @ Uin=4...30V or open “on” @ Uin=0...1V
Dimensions	43x73x35mm
Weight	approx. 70g

EM-140A BLOCK DIAGRAM

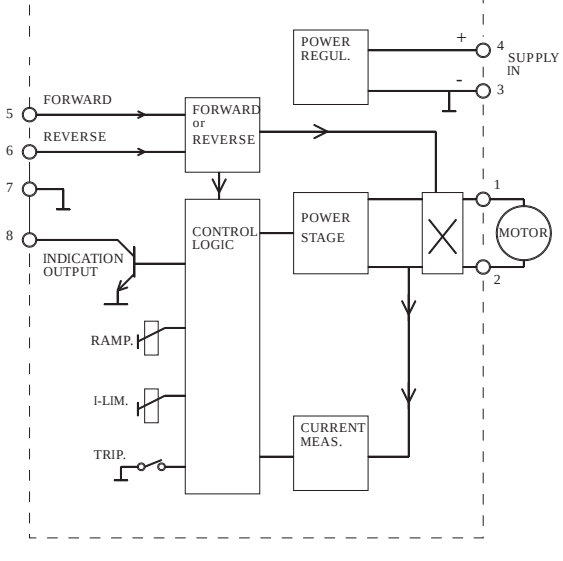

EM-140A OPERATING INSTRUCTIONS

Supply voltage must be filtered 11-35 VDC with less than 30% rippel at full load. Caution! Wrong polarity can damage the unit.
Caution! The unit does not have a internal fuse.

Selecting the current limit; trip-jumper is
on = cut-off -mode
off = only current limit control

Choose startup speed (ramp)

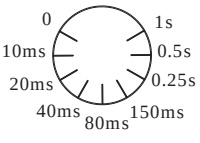

Choose current limit /A (I-lim)

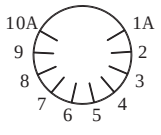

Notice!
- Motor specs can affect the current limit value
- At startup the current limit value is double the value set

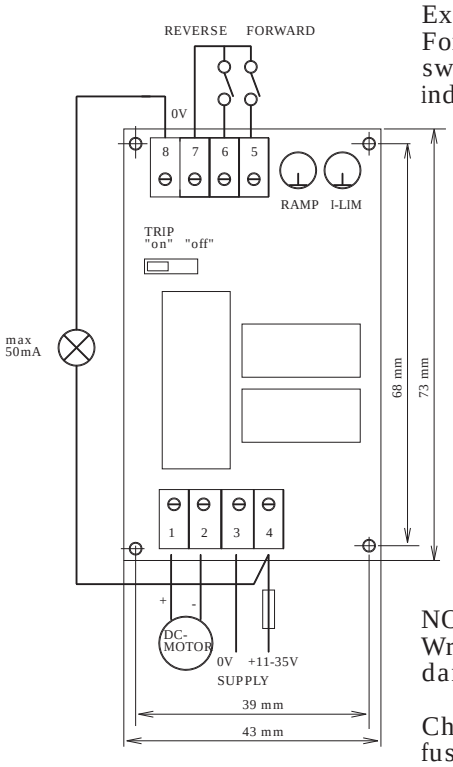

Example:
Forward / Reverse with switches, current limit indication with ext. lamp.

NOTICE!
Wrong polarity can damage the unit.

Choose a suitable fuse for the application.

EXAMPLE 1: (current-trip selected)

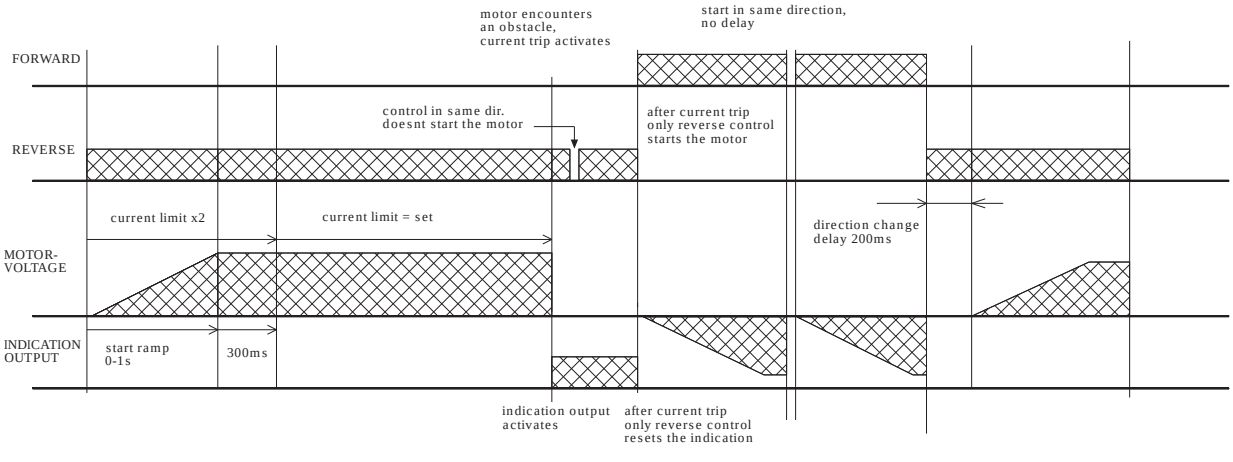

EXAMPLE 2: (continuous current limit selected)

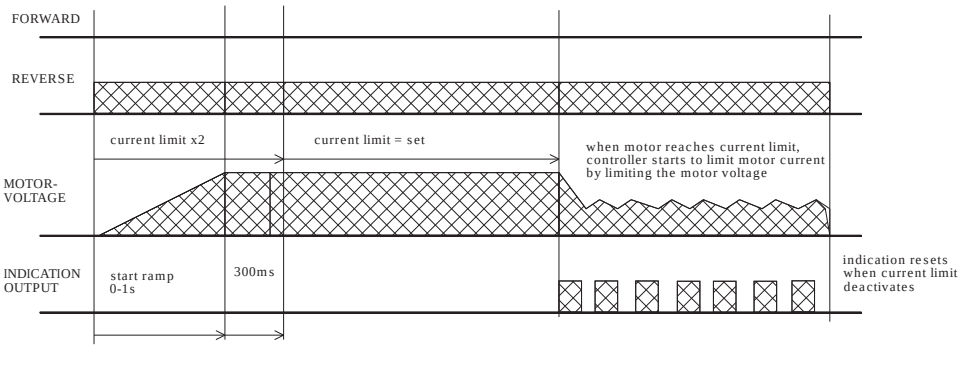

ELECTROMEN Oy Vähäheikkiläntie 56B, 20810 Turku, FINLAND Tel. +358-2-4693050 Fax. +358-2-4693052

EM-143s DC-MOTOR SERVOCONTROLLER 12-32V 4A 4-QUAD

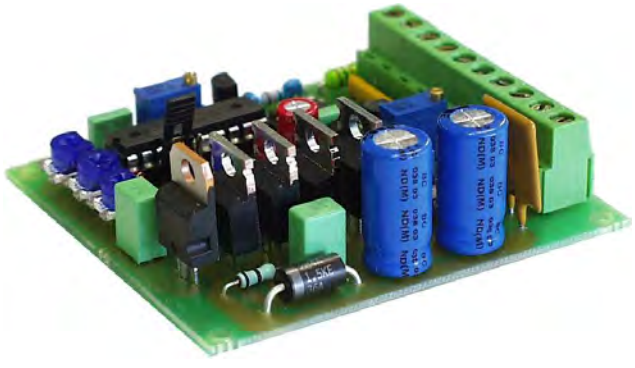

FEATURES:

- Small size
- Positioning precision 1/400
- Four drive quadrants
- High efficiency >92%
- For motors 5-100W
- Rail mounting base fittable
- Adjustable current limit
- Adjustable output current
- Adjustable positioning window
- Settable maximum speed

EM-143s is a motor controller for permanent magnet DC-motors. The unit is primarily designed for positioning usage, where position information is derived from potentiometer or as voltage, for example spindlemotors equipped with potentiometers.
The unit is so called four quadrant controller, in other words it drives and brakes in both directions. The braking is regenerative by nature as it feeds braking energy back to power source. If the power source is not a battery the unit will feed braking energy to motors internal resistance.
EM-143s has a window comparator, which measures the diffirence between feedback and reference value and uses this to control the motor. The unit has an adjustable positioning window, that specifies the level of diffirence to occur for correction to take place, in other words the precision of positioning. Range and zero -trims can be used to match the reference value with feedback value. Using the start level adjustment the minimum motor voltage can be suited for the application. Too low start level will result in motor warming and increased current consumption as a consiquence of the motor not being able to perform small corrections due to lack of power. Too high start level will cause too rapid corrections or oscillation.
Motor current can be limited using motor current adjustment. It is possible to switch current limit into so called trip mode in which current limitation will switch off drive. If the current limit has been exceeded for one second, the unit won't be active until driven into opposite direction.
The power stage is protected against voltage peaks, overload and momentary shortcut. Reversed polarity connection should be avoided even though the unit is equipped with self recovery fuse.

TECHNICAL DATA

Supply voltage	12-32Vdc
Idle current	< 30mA
Fuse	4A self recovery
Load capacity	4A continuous
	8A mom. (8s/30s)
	14A mom. (2s/30s)
Current limit	1-14A
Operating freq.	approx. 22kHz
Control voltage	0-5...0-10V
Control potentiometer	1kohm...10kohm
"stop" control	4-30V "stop"
	<1V or open "drive"
Trip-indication output	NPN -open coll. 30V / 100mA
Input imp.	pins 6 and 9 = 50kohm
	pin 8 = 35kohm
Efficiency	>92%
Operating temp,	-10...50°C
Dimensions	(72 x 65 x 25) mm
Weight	approx. 80g

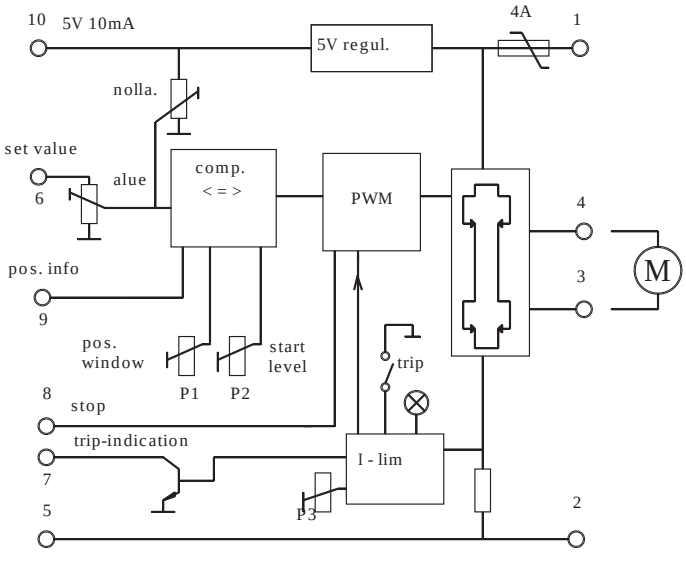

EM-143s USAGE

IMPORTANT !!
Supply voltage filtered (<20% ripple)
12-32VDC.
!! Check the polarity before connecting.

ADJUSTMENTS
Recommended start values in brackets.

START LEVEL (25%)
Adjustment sets motor start level.
Start level should be se so that motor always starts reliably but not too rapidly.

CURRENT LIMIT (= motor nominal current)
Set max. motor current (moment).
A red led indicates the activity of current limit.
At first it's recommended to set current limit low and increase the current to suitable level when the application seems to work.

POSITIONING WINDOW (2%)
Sets so called positioning window dimension.
Suitable value depends on the mechanics of the application. First set to the maximum, then decrease until application starts twiching, then set backwards until twitching ends. START LEVEL and WINDOW adjustment affect each other a little. To obtain best possible precision and positioning window start level must be precisely convenient.

RANGE AND ZERO
Use these adjustments to match reference and feedback values. For example, when using 100mm spindlemotor with only 70mm needed. Range adjustment is used to set frequency and zero for position, for example center. NOTICE that range adjustment also affects zero. Zero doesn't affect range. If these adjustments are inadequate external series resistors can be added to feedback potentiometer.

RANGE RESISTANCE (2.2k) (maximum speed)
Resistors are used to optimize the operation in specific voltage range.
1.8k 28V application
2.2k 24V application
3.3k 18V application
4.7k 12V application

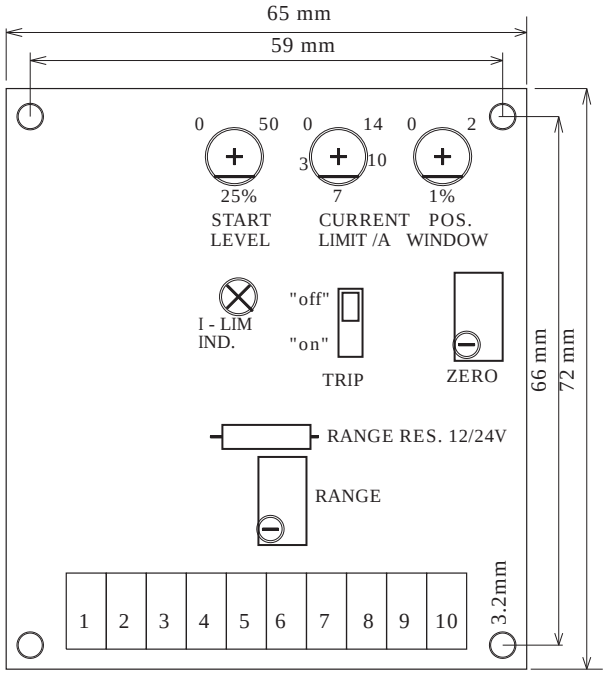

TERMINALS

1. Supply voltage 12-32V
2. Supply voltage 0V
3. Motor out -
4. Motor out +
5. Signal gnd (0V)
6. Set value in
7. Trip indication 100mA
8. Stop
9. Position feedback in
10. 5V 10mA reference out

INTRODUCTION
Connect the application, adjust set value to approximate center. Switch on, application should seek its way to a certain point. Change the set value and position should change accordingly, if the application runs from one end to the other exchange motor leads with each other (3 and 4). Adjust the precision and dynamic to suit your application as described before.

EXAMPLE 1
Basic application where both set value and position value is derived from potentiometer.

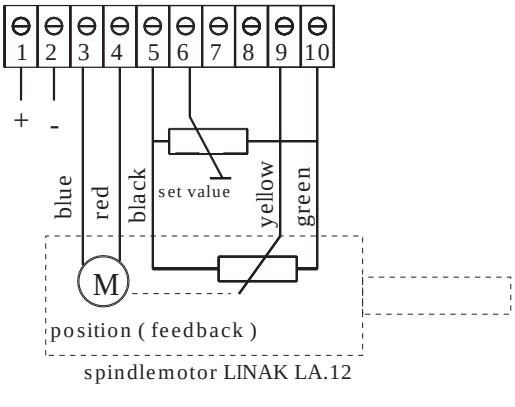

EXAMPLE 2
In this application set value is given in voltage, and position from potentiometer.

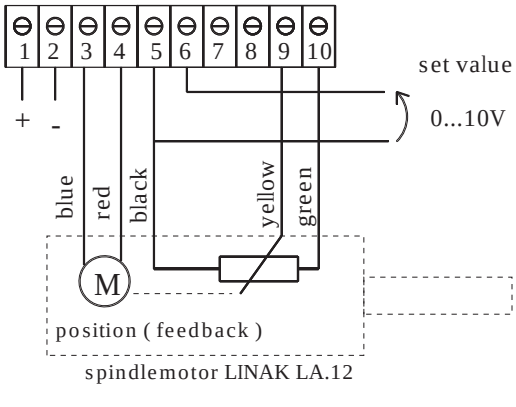

ELECTROMEN Oy Vähäheikkiläntie 56B, 20810 Turku, FINLAND Tel. +358-2-4693050 Fax. +358-2-4693052

EM-151B BRUSHLESS DC MOTOR DRIVER 12-24V 25A

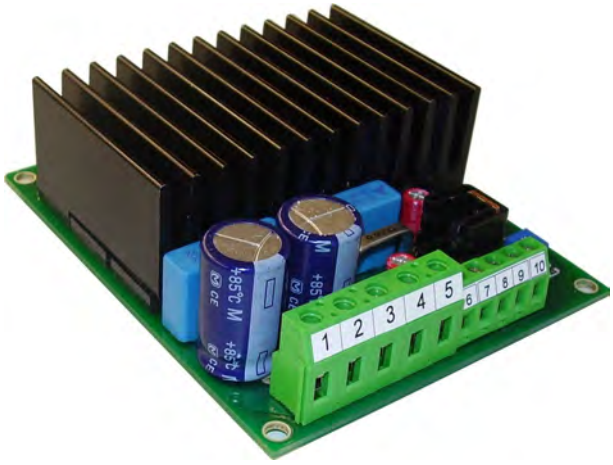

FEATURES

- Three phase output
- Open or Closed loop speed cont.
- Controlled direction change
- Dynamic or Regenerative braking
- 60° or 120° commutation
- ±10V control option
- Fault output
- High efficiency
- Thermal protection
- Rail base mountable

EM-151B is a DC-motor driver for brushless dc-motor with hall-sensors. The commutation angle can be 60 or 120 deg. It has two modes for speed control. In open loop mode driver works like normal dc-motor speed controller. In closed loop mode the hall pulses are used as speed feedback. Closed loop mode offers a high accuracy in speed control.
The speed control input signal can be scaled with zero and range trims. Card includes also an acceleration and deceleration ramp adjustment for smooth starts and stops. The ramp is used also in direction change, that way it can be done controlled and smoothly. Current limit is also adjustable with trimmer. Regenerative braking can be used when power is supplied from a battery. In this case the current limit adjustment works also in braking. In overcurrent the driver activates the fault output.

TECHNICAL DATA

Supply voltage 12-32Vdc (11-35Vcd)
Undervoltage cut out 11V
Overvoltage cut out 38V
Motor current cont. max 20A (Ta<40℃)
Motor current peak max 40A (5s.)
Temperature limit 100℃ (heatsink)
Current limit adjust 0-40A
Decelerating cur. limit adj. 0-40A
Speed set signal 0-5V...0-30V
Speed set input impedance 100kohm
Ramp time 0.1s-5s. (adjustable)
PWM motor-frequency 18kHz
Digital control "on" 4-30V, "off" 0-1V or open
Control input impedances typ. 10kohm
Fault out. NPN open coll. max 30V / 10mA
Motor and supply connectors 4mm2
Control connectors 1.5mm2
Dimensions 108x91x40mm
Weight 230g
Recommended operating temp (Ta) -30...60℃

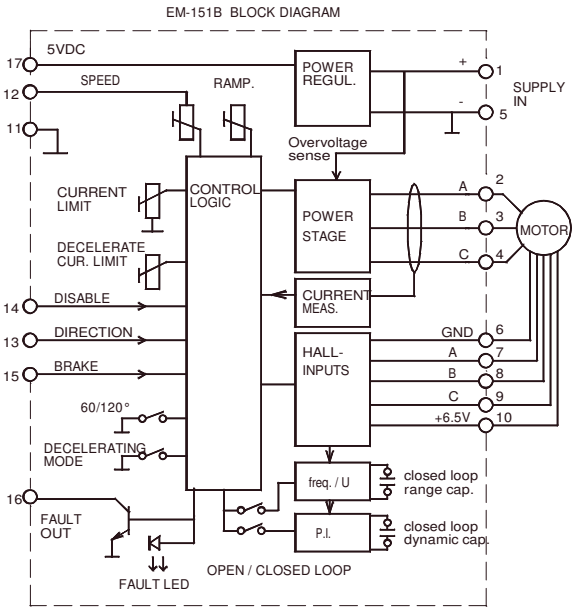

INSTRUCTION GUIDE EM-151B

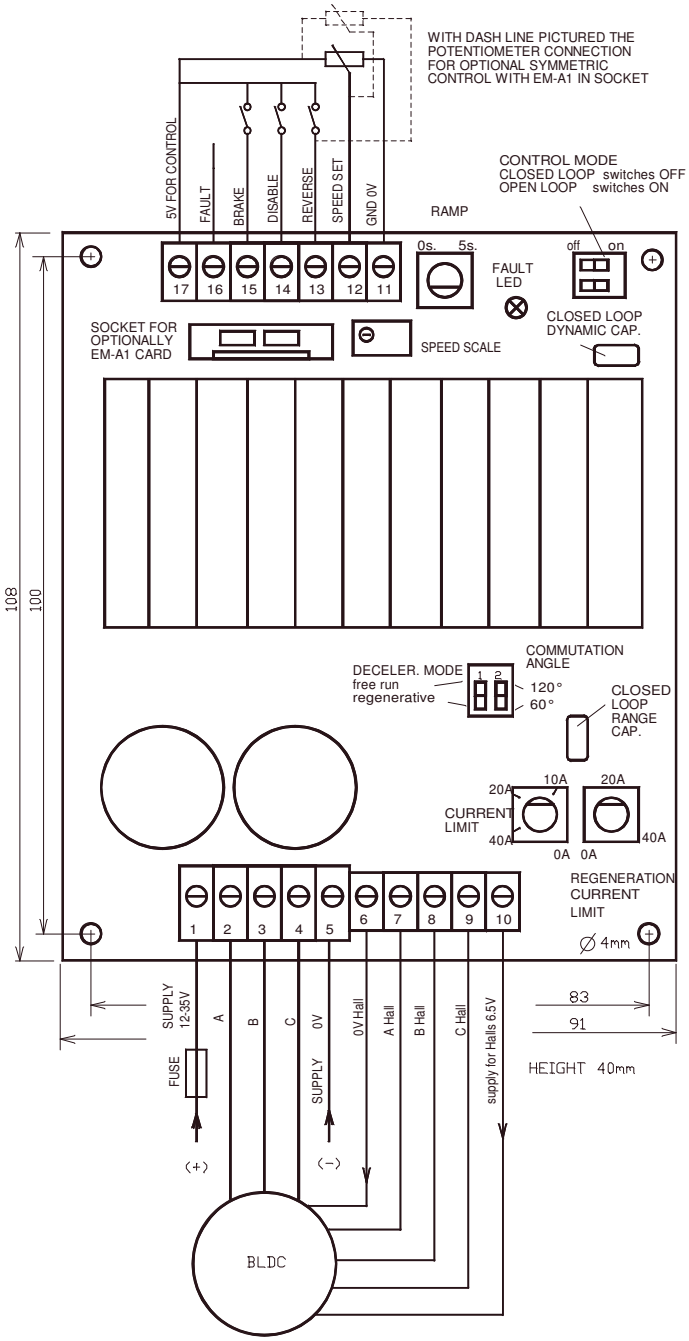

Operating voltage 12-32Vdc filtered dc, ripple less than 20% .
Use suitable external fuse for application, but less than 40A
The wrong polarity connection can damage the device.
Be carefull also with the motor hall sensor connection.

Speed can be controlled with a potentiometer or voltage signal from 0-5V to 0-30V. The speed set input signal can be adjusted with speed scale trimmer. Speed set signal can also be eg. 24V PWM from PLC as long as the frequency is higher than 1kHz. Optionally it is possible to have zero symmetric voltage control, using EM-A1option card. When EM-A1 is plugged in to its socket, the direction input (pin 13) changes to -5V output for potentiometer. In symmetrical control the motor is stopped when potentiometer is in the middle position. An outside speed set voltage signal can be from ±5 to ±30V. The RAMP adjustment can be used to smoothen the acceleration and deleration. Ramp time is adjustable from 0.1 to 5s. (0-100% / 100%-0 speed).

Speed CONTROL MODE can be selected to be an open or closed loop mode. The selection is made with two dip switches.
In open loop mode the motor is driven like normal DC-motor. In closed loop mode the driver uses the Hall-pulses as speed feed-back.
The closed loop speed range can be changed with CLOSED LOOP RANGE CAP. Smaller capasitor will offer higher speed range and the fine adjustment is made with SPEED SCALE trimmer. The factory preset value is 4.7nF which gives range up to about 6000rpm.
Size of this capasitor is inversely proportional to the speed range.
The dynamic behaviour of closed loop control can be tuned with CLOSED LOOP DYNAMIC CAP. For smaller speeds should be used a higher capasitor value. Factory preset value for this is 330nF.
On lower speed application this capasitor should be bigger, and on higher speed it should be smaller.

The digital control input works with positive commands (PNP)
The control voltage can be from 5V up to 30V.
DIR. command is used to change the rotation direction of the motor.
Dir will utilize automatically decelaration and acceleration ramps.
BRAKE command shorts the motor poles and gives a strong dynamic brake effect.
DISABLE command releases motor poles(freewheeling).
This command has the highest priority.

The right COMMUTATION ANGLE can be selected to be 60° or 120°. Selection is made with dip switch.

The DECELERATE MODE can be set to be regenerative or freewheeling. In regenerative mode the motor generates current back to the supply as the motor is decelerating. This mode is usefull only when the supply is from a battery that can accept this energy back. Also a braking load can be used.
CAUTION ! If normal power supply is used with regenerative braking the voltage could rise up to 40V which can damage the power supply. In freewheeling mode energy is not returned to supply, but of course the decelaration is also weak.
NOTICE ! The digital BRAKE command shorts the motor poles and does not regenerate energy (so called dynamic braking).

The CURRENT LIMIT limits the motor current. Exceeding this limit is indicated with FAULT LED and FAULT output.
The DECELERATION CURRENT LIMIT limits the current during the deceleration if regenerative mode is selected.
NOTICE ! The deceleration current limit does not work with digital brake command.

EM-154 DIMMER / DC POWER CONTROLLER

FEATURES:

- Load regulated adjustment
- Adjustable base level
- Suitable for common-negative or common-positive system
- EMC tested (no radio frequency interference)
- High efficiency >90%
- Rail mountable

EM-154 is a low voltage DC power control unit. The unit is connected in series with the load. Load can be resistive or inductive, for example incandescent lamps, resistors, solenoids. The power is adjusted with Pulse Width Modulation (PWM) which gives good efficiency (low thermal losses). The unit can be connected to (+) or to (-) side of the load. The lamp test switch is also possible to connect over the unit if needed. Unit includes also base level adjustment, which sets the start level of control. Two or more units can be connected parallel for higher power solution. The output is protected against load short circuit and line voltage spikes.

TECHNICAL DATA

Supply	12...32 Vdc
Idle current	typ. 2 mA
Load capacity	max. 3 A
Adjustment range	0...98%
Base level adjustment	0...30%
Operating frequency	typ. 250 Hz
Recommended load	2...80 W
Recom. potentiometer	1k...50k
Efficiency	>90%
Oper. ambient temp.	0...50°C
Weight	70 g
EMC -tested	EN-50082, EN-50081

WIRING EXAMPLES

COMMON-POSITIVE
+12...32Vdc

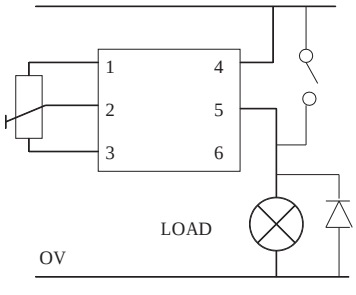

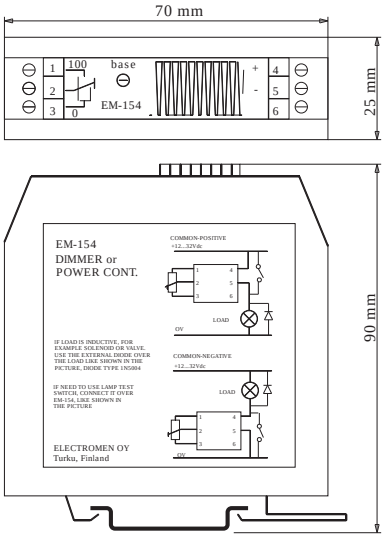

HOUSING PHOENIX UEGM-25 79x90x25 RAIL MOUNTING

COMMON-NEGATIVE
+12...32Vdc

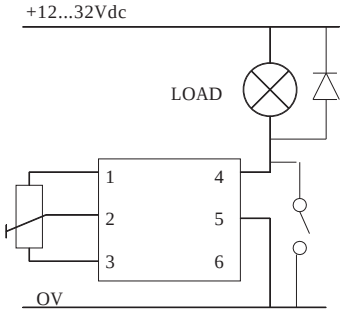

IF LOAD IS INDUCTIVE, FOR EXAMPLE SOLENOID OR VALVE USE THE EXTERNAL DIODE OVER THE LOAD AS SHOWN IN THE PICTURE, DIODE TYPE 1N5004

IF LAMP TEST SWITCH IS REQUIRED, CONNECT IT OVER EM-154, AS SHOWN IN THE PICTURE

ELECTROMEN Oy Vähäheikkiläntie 56B, 20810 Turku, FINLAND Tel. +358-2-4693050 Fax. +358-2-4693052

EM-160 DC-MOTOR SERVOCONTROLLER 12-32V 12A 4-QUAD

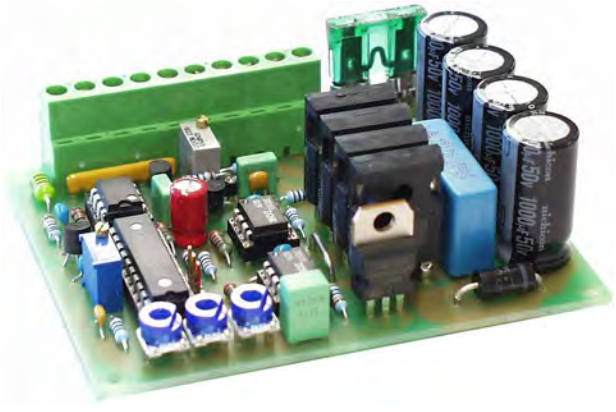

FEATURES:

- Small size
- Positioning precision 1/400
- Four drive quadrants
- High efficiency >92%
- For motors 10-300W
- Rail mounting base fittable
- Adjustable current limit
- Adjustable output current
- Adjustable positioning window
- Settable maximum speed

EM-160 is a motor controller for permanent magnet DC-motors. The unit is primarily designed for positioning usage, where position information is derived from potentiometer or as voltage, for example spindlemotors equipped with potentiometers.
The unit is so called four quadrant controller, in other words it drives and brakes in both directions. The braking is regenerative by nature as it feeds braking energy back to power source. If the power source is not a battery the unit will feed braking energy to motors internal resistance.
EM-160 has a window comparator, which measures the diffirence between feedback and reference value and uses this to control the motor. The unit has an adjustable positioning window, that specifies the level of diffirence to occur for correction to take place, in other words the precision of positioning. Range and zero -trims can be used to match the reference value with feedback value. Using the start level adjustment the minimum motor voltage can be suited for the application. Too low start level will result in motor warming and increased current consumption as a consiquence of the motor not being able to perform small corrections due to lack of power. Too high start level will cause too rapid corrections or oscillation.
Motor current can be limited using motor current adjustment. It is possible to switch current limit into so called trip mode in which current limitation will switch off drive. If the current limit has been exceeded for one second, the unit won't be active until driven into opposite direction.
The power stage is protected against voltage peaks, overload and momentary shortcut. Reversed polarity connection should be avoided even though the unit is equipped with a fuse.

TECHNICAL DATA

Supply voltage	12-32Vdc
Idle current	< 30mA
Fuse	30A "ATO"
Load capacity	12A "ATO"
	20A mom. (8s/30s)
	25A mom. (2s/30s)
Current limit	3-30A
Operating freq.	approx. 22kHz
Control voltage	0-5...0-10V
Control potentiometer	1kohm...10kohm
"stop" control	>4V "stop"
	<1V or open "drive"
Trip-indication output	NPN -open coll. 30V / 100mA
Input imp.	pins 6 and 9 = 50kohm
	pin 8 = 35kohm
Efficiency	>92%
Operating temp,	-10...50°C
Dimensions	(88 x 72 x 30) mm
Weight	approx. 110g

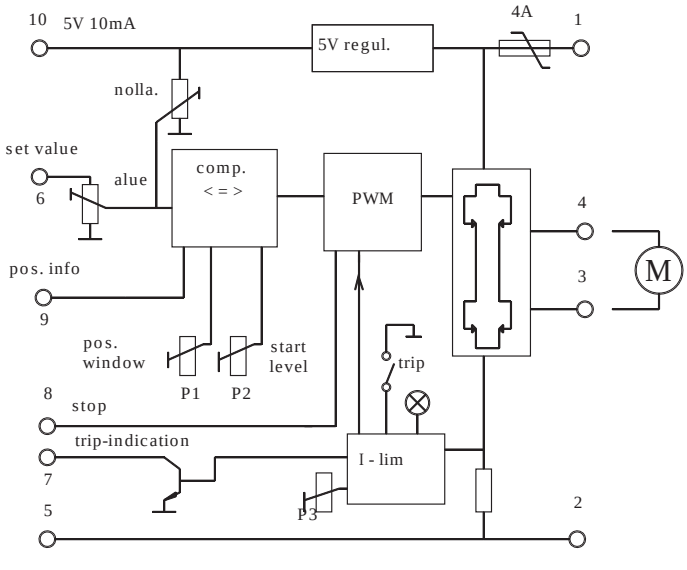

EM-160 USAGE

IMPORTANT !!
Supply voltage filtered (<20% ripple)
12-32VDC.
!! Check the polarity before connecting.

ADJUSTMENTS
Recommended start values in brackets.

START LEVEL (25%)
Adjustment sets motor start level.
Start level should be se so that motor always starts reliably but not too rapidly.

CURRENT LIMIT (= motor nominal current)
Set max. motor current (moment).
A red led indicates the activity of current limit.
At first it's recommended to set current limit low and increase the current to suitable level when the application seems to work.

POSITIONING WINDOW (2%)
Sets so called positioning window dimension.
Suitable value depends on the mechanics of the application. First set to the maximum, then decrease until application starts twiching, then set backwards until twitching ends. START LEVEL and WINDOW adjustment affect each other a little. To obtain best possible precision and positioning window start level must be precisely convenient.

RANGE AND ZERO
Use these adjustments to match reference and feedback values. For example, when using 100mm spindlemotor with only 70mm needed. Range adjustment is used to set frequency and zero for position, for example center. NOTICE that range adjustment also affects zero. Zero doesn't affect range. If these adjustments are inadequate external series resistors can be added to feedback potentiometer.

RANGE RESISTANCE (2.2k) (maximum speed)
Resistors are used to optimize the operation in specific voltage range.
1.8k 28V application
2.2k 24V application
3.3k 18V application
4.7k 12V application

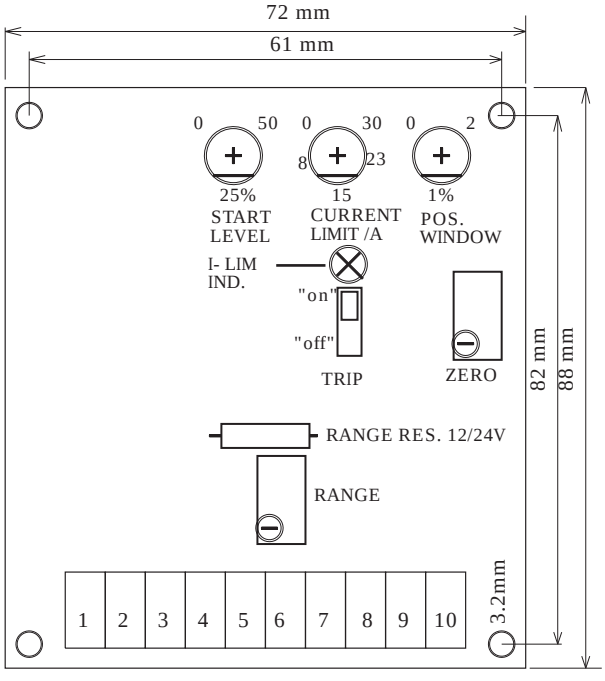

TERMINALS

1. Supply voltage 12-32V
2. Supply voltage 0V
3. Motor out -
4. Motor out +
5. Signal gnd (0V)
6. Set value in
7. Trip indication 100mA
8. Stop
9. Position feedback in
10. 5V 10mA reference out

INTRODUCTION
Connect the application, adjust set value to approximate center. Switch on, application should seek its way to a certain point. Change the set value and position should change accordingly, if the application runs from one end to the other exchange motor leads with each other (3 and 4). Adjust the precision and dynamic to suit your application as described before.

EXAMPLE 1
Basic application where both set value and position value is derived from potentiometer.

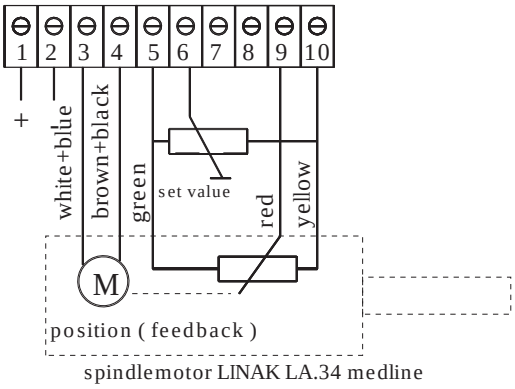

spindlemotor LINAK LA.34 medline

EXAMPLE 2
In this application set value is given in voltage, and position from potentiometer.

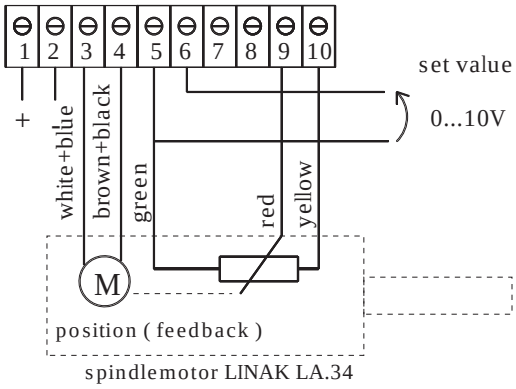

spindlemotor LINAK LA.34

ELECTROMEN Oy Vähäheikkiläntie 56B, 20810 Turku, FINLAND Tel. +358-2-4693050 Fax. +358-2-4693052

EM-162 230VAC/1A POWER CONTROLLER

FEATURES:

- **Triac, phase angle controller**
- **10...200W, suitable loads: resistor, fan motor and transformer**
- **Base level adjustment**
- **0...10V or 4...20mA control**
- **Galvanic isolation**
- **Rail base mountable**
- **EMC tested**

EM-162 is a triac phase angle controller. The unit works fine with both resistive and inductive loads due to advanced triggering technique. Suitable loads include for example lamps, resistors, fan motors and transformers. Base level adjustment can be used to set the start level 0-25%. This function is useful especially in lighting and fan usage. The control stage is galvanically isolated from power stage, which means the unit is easy to connect to a part of an automation system. The power stage is equipped with a fuse, the control stage is protected against over voltage and reversed polarity.

TECHNICAL DATA

Supply	190-265Vac
Current consumption	1A max.
Load	10-200W
Control range	0-99%
Base level adjustment	0-25%
Aux. voltage	12-30Vdc
Aux. v. current	20mA max
Control	0-10V / Rin 100k 4-20mA / Rin 180R
Control start	100mV / 4.2mA
Fuse	T1.6A
Isolation voltage	1500Vrms
Operating temp	-10...50°C
Dimensions	90,60,36mm
Weight	approx. 70g

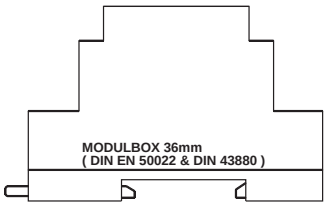

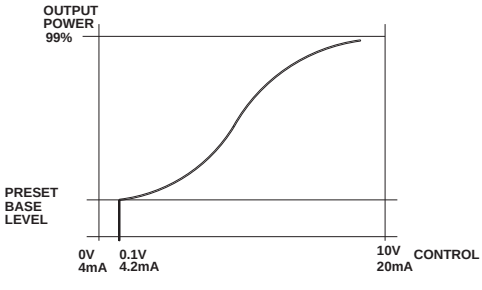

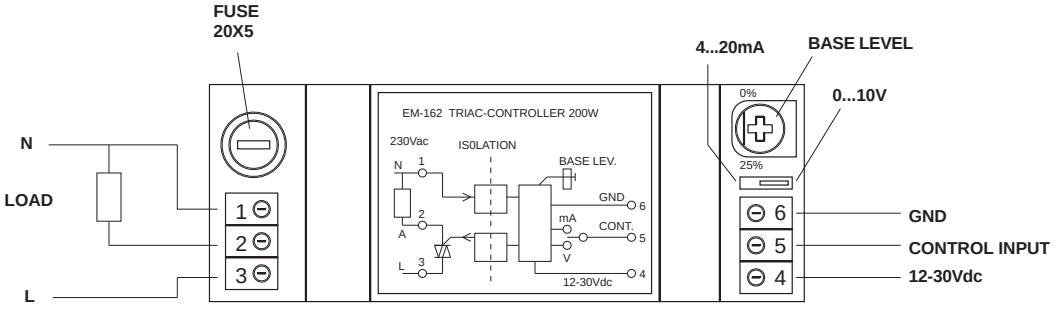

ELECTROMEN Oy Vähäheikkiläntie 56B, 20810 Turku, FINLAND Tel. +358-2-4693050 Fax. +358-2-4693052

EM-165 POSITIONING DRIVER 12-32Vdc

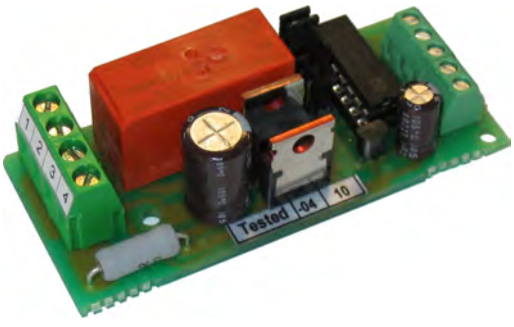

FEATURES

- small in size
- low cost
- pos. accuracy. typ. ±1%
- good effeciency >92%
- for motors 5-200W
- start- and stop-ramp
- overload protected
- selectable current limit
- rail base mountable

EM-165 is a low cost positioning driver. It has an inbuilt servo amplifier and a power stage for controling a dc-motor. It is suitable for driving a spindle motor equipped with feedback potentiometer. EM-165 is best suited for slow and medium speed systems with a transitional period of 2...30s (from end to end). The current limit is settable and can be used to limit the torque of the motor. Current trip feature will shut down the driver in fault situation, if either current is on the limit for over 2s, or if it takes more than 30s to reach the set value. In fault situation the error output will be activated. Reactivation from the trip situation is done by applying a reverse control command.

Positioning is done by giving a new set value using the set value potentiometer or voltage signal 0-5V. The driver compares the feedback value to the set value and starts to drive the motor towards the set value. When these values begin to approach each other, the driver will slow down, and when the values are identical the motor stops. EM-165 is small sized and easy to install. It is possible to use screw fastening or install the driver in to a rail with a rail mounting base which is available as an accessory. The power stage is equipped with self recovery overload and over current protection, but the use of an external fuse is recommended.

TECHNICAL DATA

Operating voltage	12-32Vdc
Idle current	< 40mA
Protections	overheat (self recovery), short circuit approx. 30A
Load capacity	5A continuous 8A 15s "on", 15s "off" 12A 5s "on", 15s "off"
Current limit	2, 4, 7, ja 12A settable
Accuracy	typ. ±1% of range
Input ranges	0-5V (pin 7 & 8)
Input impedance	>1Mohm
Pot.recommedation	1...100kohm.
Ref. voltage pin-5	5V (max. 15mA)
Error out	NPN -open coll. 30V / 50mA
Efficiency	> 92%
Operating temp.	-20...60°C
Dimensions	72.5x31.0x24.0mm
Weight	approx. 40g

BLOCK DIAGRAM EM-165

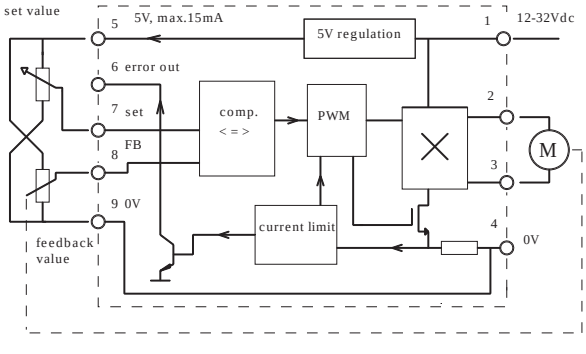

OPERATING INSTRUCTIONS EM-165

IMPORTANT !

Supply voltage must be filtered 12-32 VDC with less than 20% ripple.
Choose the fuse according to the application (max. 15A).
Check the polarity before connecting.

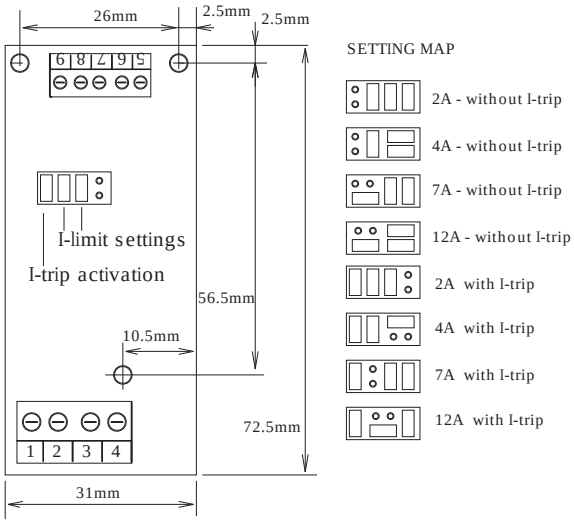

SETTINGS

CURRENT TRIP (DRIVE SHUT DOWN)

The current trip function is activated with jumper named "I-trip". If current trip is activated the driver will be shut down and the error output will appear in the following cases:
- overcurrent situation for over 2s
- positioning takes longer than 30s.

If the current trip is not activated, the driver will not be shut down, but the error output will operate in the same manner as in activated mode.

CURRENT LIMIT (MOTOR TORGUE LIMIT)

There are four settable current limit values. Attached the map of the values and settings.

TAKING ON DUTY

Connect the wiring and make sure, that the current limit is set according to the application (not too high!). Switch the power on. The system should now find right position and follow the adjustment of the set value potentiometer.

If system only moves from end to end, or jam to the other end. Try to switch the motor wires (pin 2 & 3). Check also all other wiring.

If system is working o.k. but working direction is wrong. Switch both, motor wires (pin 2 & 3) and the feedback potentiometer wires (pin 5 & 9) at the same time.

If is needed to adjust the system range, it is possible to add serial trims or resistors to the potentiometer wiring.

CONNECTION TERMINALS

1. Supply 12-32Vdc
2. Motor
3. Motor
4 Supply 0V, gnd
5. 5V-out, exitation for pots. max. 15mA
6. error-out NPN OPEN-COLL. max. 50mA
7. Set value input, 0-5V or potentiometer
8. Feedback input 0-5V or potentiometer
9. 0V, signal gnd

APPLICATION 1

Driver working with spindle motor equipped with potentiometer. Adjust trims can be added for range trimming, if needed.

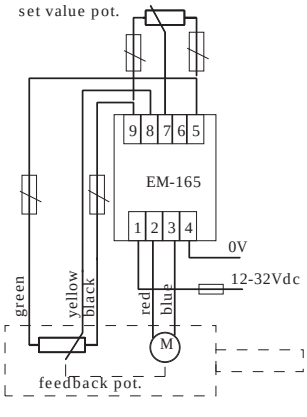

Spindle motor equipped with potentiometer, LINAK LA12

APPLICATION 2

Device drives angularly adjustable table.
Feedback is coming from 0-5V inclinometer.
Set value is 0-5V voltage signal.

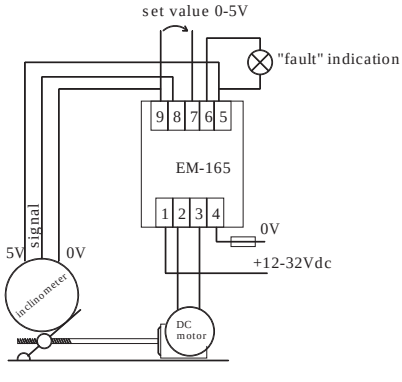

Inclinometer Bosch 0280 122 201 + gearmotor

ELECTROMEN Oy Vähäheikkiläntie 56B, 20810 Turku, FINLAND Tel. +358-2-4693050 Fax. +358-2-4693052

EM-165pf POSITIONING DRIVER 12-32Vdc

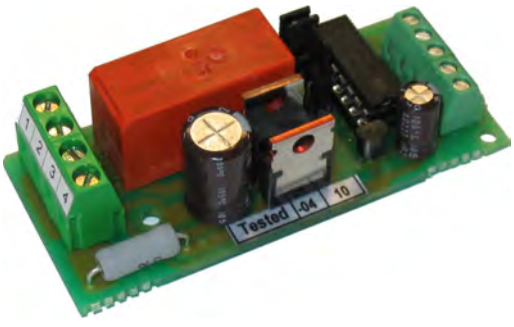

FEATURES

- Pos. accuracy typ. ±1%
- High efficiency >92%
- For motors 5-200W
- Start- and stop-ramp
- Overload protection
- Error indication
- Control value with pot. or voltage
- 128, 256, 512 ,1024 pulse ranges
- Adjustable current limit
- Rail base mountable
- EMC-tested (CE)

EM-165pf is a positioning driver for pulse feedback systems. Potentiometer or direct voltage signal can be used as control value. The device has inbuild up-down counter and servo amplifier for positioning. There are four counter ranges: 128, 256, 512 and 1024 pulses. Additionally the range can be fine-tuned. The power stage of the unit is capable of directly driving a DC-motor. EM-165pf is suitable for example driving a spindle motor equipped with pulse transducer. EM-165pf is best suited for slow and medium speed systems with transitional period of 4...50s (from end to end). The current limit is settable and can be used to limit the torque of the motor. Current trip feature will shut down the driver in fault situation, if either current is on the limit for over 2s, or if it takes more than 50s to reach the set value. In fault situation the error output will be activated. Reactivation from the trip situation is done by applying a reverse control command or by switching power off and back on.

Every time the unit is switched on, it will first drive the mechanism to one end and reset the counter. After this it will drive the mechanism to control value. Every time the unit receives new control value, it starts the motor and begins to compare the counter value with control value. When these two start to approach each other, the controller slows down and finally stops when the values are indentical. Besides using one of the pulse ranges, the positioning range can be fine tuned with control value range trim. EM-165pf is small in size and can be mounted into a rail using a rail mounting base or screws. The unit has a self recovery overload protection and short circuit protection. However the use of an external fuse is recommended.

TECHNICAL DATA

Supply	12-32Vdc
Idle current	< 40mA
Protection	self recovery thermal prot. shot circuit prot. approx.30A
Load capacity	5A continuos 8A 50% use max. 30s 12A 20% use max. 10s
Current limit	0- 12A settable
Precision	typ. ±1% range
Control value range	0-5V or 0-10V (pin 7)
Input impedance	100kohm
Potentiometer	1...10kohm.
Pulse in	4-30V 4.7kohm
Pulse width	> 5ms
Pulse frequency	max 200Hz
Pulse range	128, 256 ,512 or 1024
Auxillary pin 5	5V max. 15mA
Error output	NPN -open coll. max. 30V / 50mA
Efficiency	> 92%
Oper. temperature	-20...60°C
Dimensions	73,32,20mm
Weight	approx.40g

BLOCK DIAGRAM EM-165pf

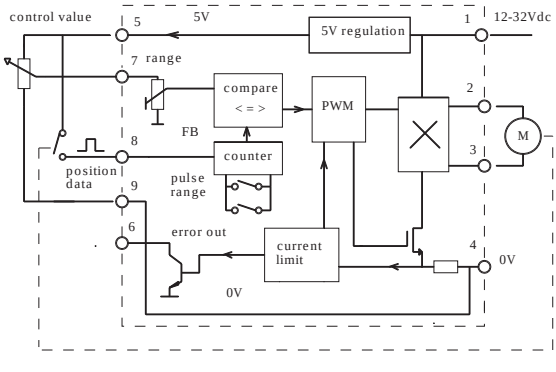

OPERATING INSTRUCTIONS EM-165pf

IMPORTANT !
Supply voltage must be filtered 12-32 VDC with less than 20% ripple. Choose the fuse according to the application (max. 15A). Check the polarity before connecting.

SETTINGS

CURRENT TRIP (DRIVE SHUT DOWN)
When current trip activates, the driver will shut down and the error output will activate. Current trip will activate in either of the following cases:
- overcurrent situation for over 2s
- positioning takes longer than 50s

CURRENT LIMIT (MOTOR TORQUE LIMIT)
Maximum motor current can be limited with current limit trim.

PULSE RANGE
Minimum value is from one end to other end. Setting is done with two jumpers.

RANGE
Control value scale trim, use this to fine tune range.

OPERATING INSTRUCTIONS
Connect the application and make sure the current limit is not set too high. Choose the pulse range according to the application.

When power is switched on, the unit will perform a reset operation, in which positioning count value is set at zero in certain position. In practice the unit drives motor towards the other end until no more pulses are received, in other words system is driven home after which counter is reset. After this process control value is used to drive system to the desired position. Pulse receiving can be ended by using an external limit switch.

Funtional direction can be changed by exchanging the motor wiring polarity.

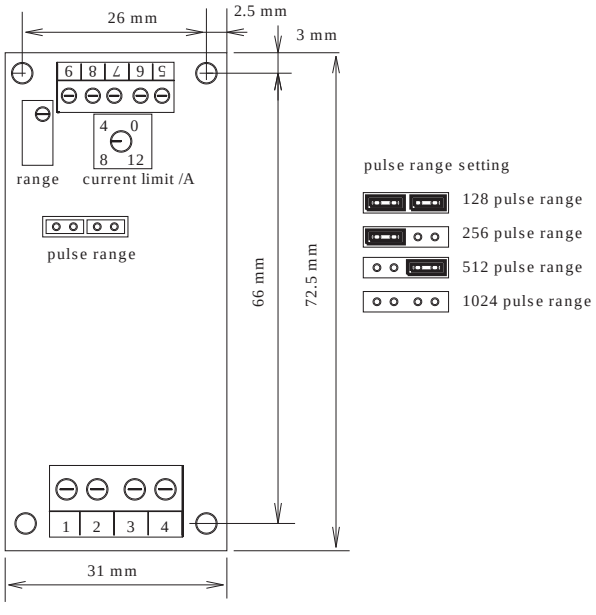

TERMINALS

1. 12-32Vdc
2. Motor
3. Motor
4. 0V, gnd.
5. 5V ref. output max 15mA
6. Error output OPEN-COLL. 50mA
7. Control value input 50mV-5V, 100mV-10V or pot.
8. Positioning data input (4-30V pulse).
9. 0V, signal gnd

EXAMPLE 1

In this example positioning data is derived from internal pulse switch in spindle motor. Potentiometer is used to set control value. Spindle motor has internal limit switches, which will take care of reset operation.

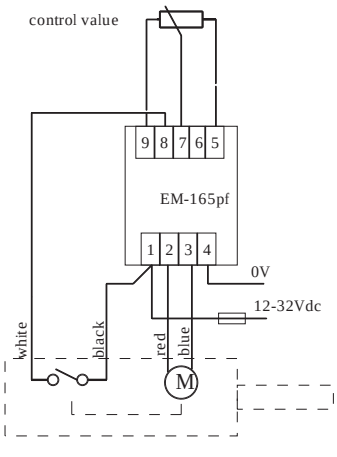

Spindle motor LINAK LA.12 with pulse output.

EXAMPLE 2

Application feedback is derived from pulse sensor. Control value is set with 0-5V or 0-10V voltage signal. "Home"-switch will take care of reset operation, the diode above switch makes it possible to startup in other direction, when positioning starts.

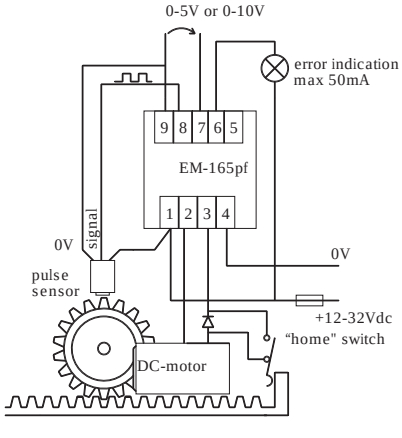

Pulse sensor + gear motor

ELECTROMEN Oy Vähäheikkiläntie 56B, 20810 Turku, FINLAND Tel. +358-2-4693050 Fax. +358-2-4693052

EM-167 COMPACT POSITIONING DRIVER 12-32Vdc

FEATURES

- **small size**
- **pos. accuracy typ. ±1%**
- **good efficiency >92%**
- **for motors 5-200W**
- **start- and stop-ramp**
- **overload protected**
- **adjustable current limit**
- **adjustable range**

EM-167 is a compact positioning driver. The unit is equipped with its own set value potentiometer. EM-167 also has an inbuilt servo-amp. and power stage which is capable of driving a DC motor directly. It is suitable for driving a DC spindle motors equipped with feedback potentiometer. EM-167 is best suited for slow and medium speed systems with a transitional period of 2...30s (from end to end).
The current limit is adjustable and can be used to limit the torque of the motor. Current trip feature will shut down the driver in fault situation, if either current is on the limit for over 2s, or if it takes more than 30s to reach the set value. In fault situation the error output will be activated. Reactivation from the trip situation is done by applying a reverse control command.

Positioning is done by giving a set value using the EM-167 internal potentiometer. The driver compares the feedback value to the set value and starts to drive the motor towards the set value. When these values begin to approach each other the driver will slow down, and when the values are identical the motor stops. The operating range can be adjusted / limited from both ends with min. and max. adjustments. EM-167 is small-sized and easy to install. Due to its wide temperature range, the unit is suitable also for vehicle use. The power stage is equipped with self recovery overload and over current protection, but the use of an external fuse is recommended.

TECHNICAL DATA

Operating voltage	12-32Vdc
Idle current	< 40mA
Protections	overheat (self recovery) short circuit approx. 30A
Load capacity	4A continuous 8A 10s "on" 20s "off" 15A 3s "on" 30s "off"
Current limit	0-15A adjustable
Range adj.	0-30% low. & 70-100% up.
Accuracy	typ. ±1% of range
Feedback input	potentiometer 1...100kohm or voltage signal 0-5V
Ref. voltage pin-2	5V max. 15mA
Error out	NPN -open coll. 30V / 50mA
Efficiency	> 92%
Operating temp.	-20...60°C
Dimensions	39x39x50mm
Weight	approx. 85g

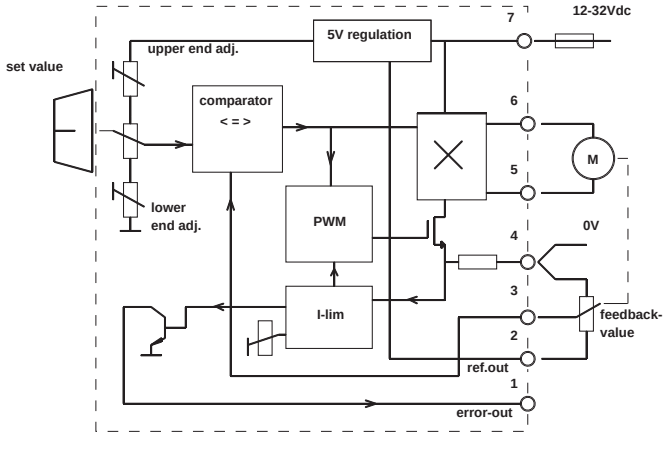

OPERATING INSTRUCTIONS EM-167

IMPORTANT !

Supply voltage must be filtered 12-32 VDC
with less than 20% ripple.

Choose the fuse according to the
application (max 15A).

Check the polarity before connecting.

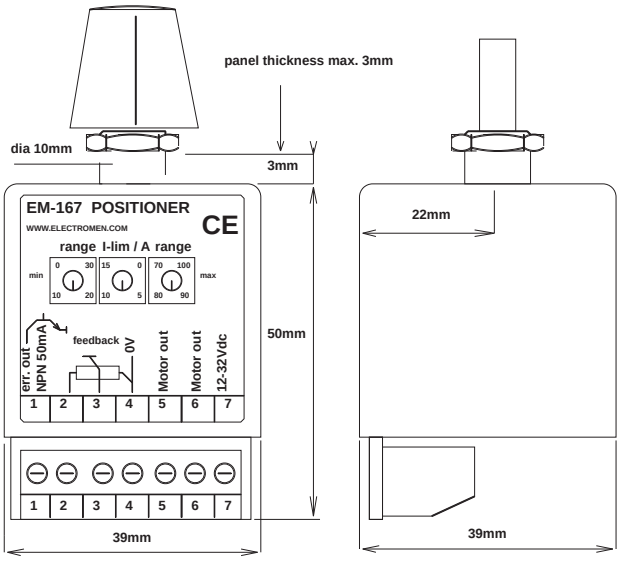

ADJUSTMENTS

CURRENT LIMIT (MOTOR TORQUE)
First adjust the current limit equal to the rated motor current. After you get the application up and running, you can adjust the current limit to more suitable value for your application. In other words, use this adjustment to protect your motor and mechanics.

LOWER AND UPPER LIMITS (RANGE ADJUSTMENTS)
With these adjustments the range can be adjusted from both ends. Upper end from 70...100% of range and lower end from 0...30% of range.
For example, if the spindle motor range of movement is at maximum 0...100mm, using these adjustments the range can be redused to 30...70mm at minimum.

TAKING ON DUTY

Connect the wiring and make sure that the current is adjusted according to the application (not too high!). Switch the power on. The system should now find the right position and follow the adjustment of the set value potentiometer.

If system only moves from end to end, or jam to the other end. Try to switch the motor wires (pin 5 & 6). Check also all other wiring.

If system is working o.k. but working direction is wrong, switch both, motor wires (pin 5 & 6) and the feedback potentiometer wires (pin 2 & 4) at the same time.

CONNECTION TERMINALS

1. error output, 30V / 50mA
2. 5V out, exitation for pot. max 15mA
3. feedback input
4. 0V, gnd
5. Motor
6. Motor
7. Supply 12-32Vdc

APPLICATION 1
Device connected to a spindle motor, feedback coming from spindle motor potentiometer.

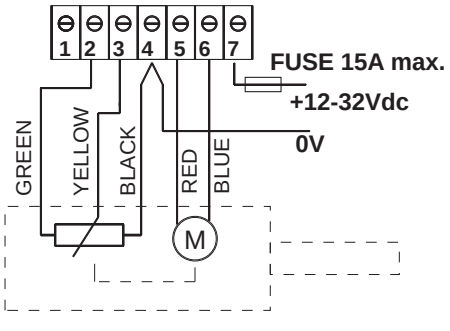

spindlemotor with feedback potentiometer LINAK LA.12

APPLICATION 2
EM-167 drives the angle of a table,
the feedback is coming from 0-5V inclinometer.

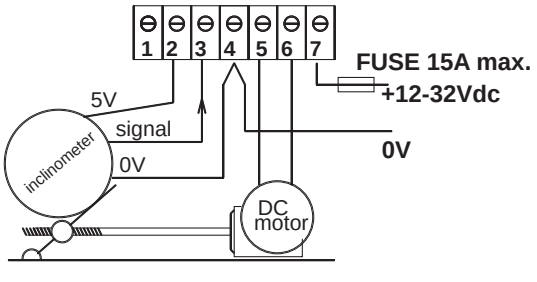

inclinometer Bosch 0280 122 201 + gearmotor

ELECTROMEN Oy Vähäheikkiläntie 56B, 20810 Turku, FINLAND Tel. +358-2-4693050 Fax. +358-2-4693052

EM-170 DC-MOTOR CONTROLLER 12-24V 1.5A

FEATURES:

- **4-quadrants**
- **controlled direction change**
- **brake**
- **adjustable current limit**
- **acceleration and deceleration ramp**
- **dip-switch settable**
- **EMC-tested**

EM-170 motor controller is designed for small DC-motors. The controller operates in 4-quadrants, in other words it is possible to drive the motor in varible speed, change motor running direction and brake. The power stage operates with PWM-principle and has thus high efficiency.

Speed set value is given as analog voltage signal. Motor voltage is fed back to controller, so changes in operating voltage will not affect motor running speed.
10V regulated auxillary voltage can be used for speed set potentiometer reference voltage. The acceleration speed can be adjusted with acceleration and deceleration ramp. Deceleration ramp can also be bypassed when rapid braking is desired. Additionally the unit is equipped with speed2-feature, which can be activated individually. This is especially practical in positioning applications. Current limit can be used to restrict motor torque and is dip-switch settable. Control inputs work with positive (NPN) logic. EM-170 is EMC-tested in accordance with industrial standards.

TECHNICAL DATA:

Supply	12-35V
Current cons.	max 2A
Idle current	20mA
Output voltage	0-25V
Output current	1.5A continuous 2A (10s)
Current limit	0.2, 0.3, 0.4, 0.5, 0.6 0.7, 0.8, 0.9, 1, 1.1, 1.2 1.3, 1.4, 1.5, 1,7 and 2A
Ramp time	0, 0.1, 0.2, 0.3, 0.5 0.7, 1.0, 1.5s
Input control voltage	0-10V (Rin 100kohm)
ON/OFF control	0-1V =”off” 4-30V=”on”
Input impedance	10kohm
Auxiliary voltage	10V (max. 5mA)
Operation freq.	16kHz
Operating temp.	0-60°C
EMC	EN-50081 and EN-50082-2
Measures	60x60x20mm
Weight	30g

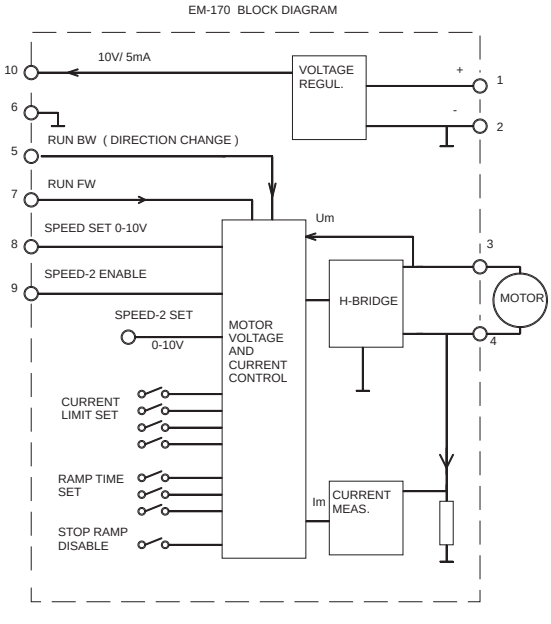

ELECTROMEN Oy Vähäheikkiläntie 56B, 20810 Turku, FINLAND Tel. +358-2-4693050 Fax. +358-2-4693052

rev.1 p.2

EM-170 OPERATING INSTRUCTIONS

Supply filtered 12-35VDC with
ripple < 20% with full loadd.
CAUTION ! reverse polarity can damage the unit
CAUTION ! no internal fuse
-

SETTINGS AND CONNECTING UNIT

Switch off power before connecting motor and power supply to EM-170. Prepare the control circuit. Set current limit and ramp time according to application.

Control input value 0-10V correspond to motor output 0-25V, so with a supply of 12V 0-5V will output 0-12.5V.
Speed-2 set value is connected to molex-connector. Scale is the same as with speed-1. If speed-2 feature is not required, this potentiometer can simply be left out. Recommended speed control potentiometer value is 2..50kohm for both speed-1 and speed-2.

Control inputs can be used with switches, analog voltage or NPN outputs of a logic.
A voltage signal greater than 4V is logic 1, maximum input voltage 30V.
Forward input will start up the motor in forward direction.
Reverse input will start up the motor in reverse direction. When motor is already running forward, direction will change.
Speed-2 will set the running speed according to input signal in molex connector. Notice:
Speed-2 input will start up the motor in forward direction even if no other inputs are activated.

Control voltage and speed set value are in reference with 0V gnd potential (pin6).

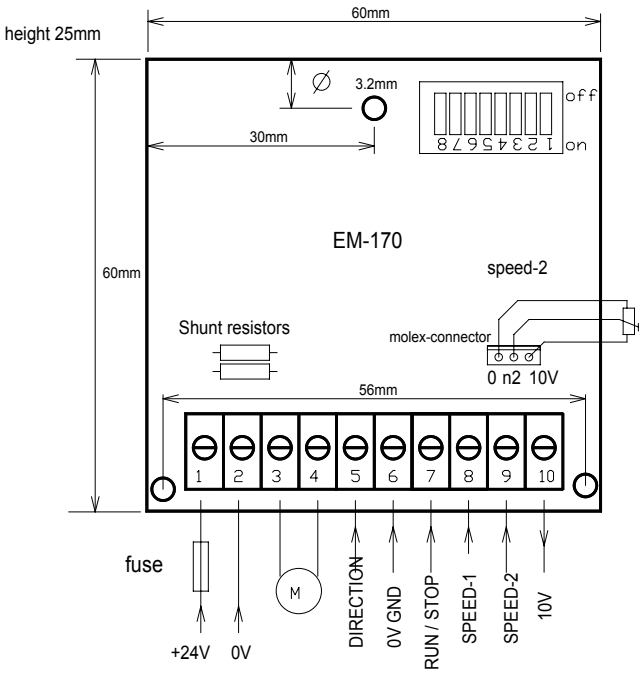

NOTE. With one shunt values will be halved.

current limit / A
dip-switches 1-4

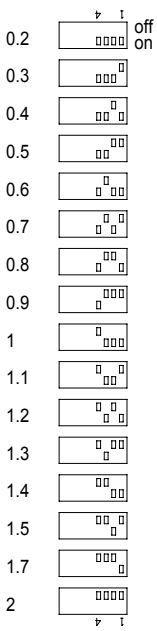

ramp time / s
dip-switches 5-7

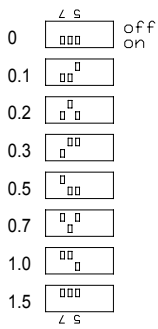

dip-switch 8

"off" = decel. ramp OFF

"on" = decel. ramp ON

control voltage / motor voltage

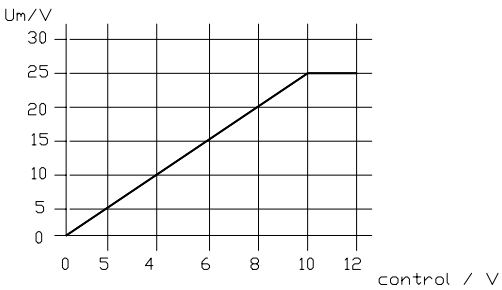

EXAMPLE 1

Speed set with potentiometer.
Speed-2 set with external trimmer.
Controls using switches.

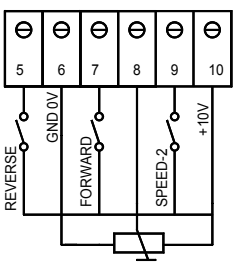

EXAMPLE 2

Speed set with voltage 0-10V.
Speed-2 set with external trimmer.
Controls using 4-30Vdc signal.

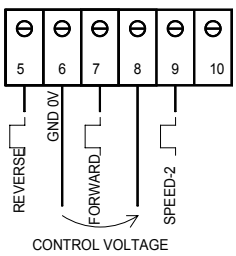

EM-174A DC-MOTOR DRIVER 12/24Vdc 8A

FEATURES:

- Bidirectional
- No brake
- Controlled direction change
- ± 10 V or 0...10 V control
- Soft start ramp
- Adjustable current limit
- Load compensation
- High efficiency
- High peak loading
- Rail base fittable

EM-174A motor driver is designed for DC-motor speed control. The unit regulates motor voltage so non regulated supply voltage is well suited. A load affecting the motor rpm can be compensated with an adjustble load compensation (RxI). Potentiometer or direct voltage signal can be used to give the speed control value. Rotation direction changes when control value turns negative or if control signal is applied to direction input. The unit has reference positive and negative signal for potentiometer use, in other words potentiometer can also be used to drive both directions, motor stops at potentiometer middle position. Set value range can be scaled with range trim.
At direction change the controller waits for motor to stop before driving in opposite direction. This avoids current peaks at direction change. The current limit can be set with a trim or direct voltage signal to protect the motor and mechanics in jam situations. Startup speed can be limited with so called ramp, which slowly rises the motor voltage in a desired way. Ramp time is set with a trim. EM-174A can be optimised for 12 or 24 V supply use.

TECHNICAL DATA

Supply	12-32 Vdc
Over voltage protection	40 V
Idle current	app. 30 mA
Driving current	8 A continuous (Ta<50°C)
	12 A peak (50 / 50 %)
Motor voltage	0-15 (12 V setting)
	0-29 (24 V setting)
Current limit	adj. 0-12 A
Cur. lim. volt. control	0-5 V (0-12 A)
Ramp time	adj. 0-3 s
Voltage loss	1 V (Im=8 A)
Operating frequency	25 kHz
Aux. voltages	-5 V and +5 V (10 mA)
Control pot.	1-50 kohm
Control volt. range	±5 V or ±10 V
	0-5 V or 0-10 V
Direction change	“backwards” @ Uin = 4-30 V
	“forward” @ Uin = 0-1 V or open
	impedance 10 kohm
Operating temp (Ta)	-20...+70°C
Dimensions	(65x73x30) mm
Weight	approx. 80 g

EM-174A BLOCK DIAGRAM

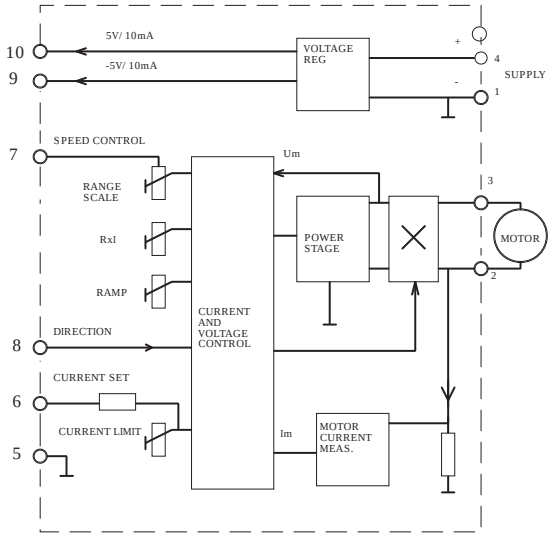

EM-174A OPERATING INSTRUCTIONS

Supply should be filtered 12-32Vdc,
max. ripple <30% on full load.
ATT. Wrong supply polarity can damage the driver.
ATT. Driver has no internal fuse.

SETTINGS AND ADJUSTMENTS

Set all trims to center position. Choose motor voltage range: with <15 voltages choose 12 V and with greater voltages choose 24 V range.
Speed set value can be given with potentiometer or using a direct voltage signal 0-5 V ... 0-10 V.
Acceleration and deceleration ramp is set with trim. In 0-3 s time unit drives from zero to full speed or from full speed to zero.
Compensation adjustment: set motor on to a low rpm, add compensation until motor starts twiching and then reduce compensation until twitching ends. After this motor loading can be tested for steady motor run.
Current limit can be set to 0-12 A, current limit can also be set using direct 0-5 V voltage signal or potentiometer. If the external control is used, turn the inbuilt current limit trim to 0-position.

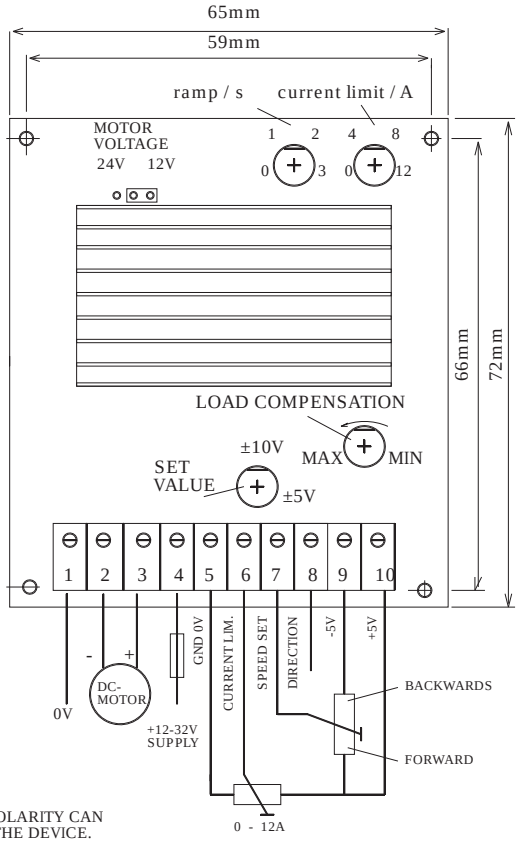

CAUTION !

WRONG POLARITY CAN DAMAGE THE DEVICE.

CHOOSE FUSE ACCORDING TO USE (1-16 A)

EXAMPLE 1 (BESIDE)

SPEED, DIRECTION AND CURRENT ARE SET WITH POTENTIOMETERS.

EXAMPLE 2

SPEED CONTROL WITH POTENTIOMETER.

DIRECTION CHANGE WITH SWITCH.

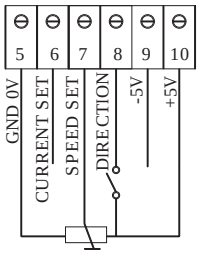

EXAMPLE 3

CONTROLS WITH VOLTAGES

ALL VOLTAGES WITH RESPECT TO GND (0 V)

CURRENT 0-5 V (0-12 A)
SPEED 0-5 V OR 0-10 V
±5 V OR ±10 V
DIRECTION 4-30 V = BACKWARDS

NOTICE!! IF CURRENT CONTROL IS USED, TURN CURRENT LIMIT TRIM TO MIN POSITION.

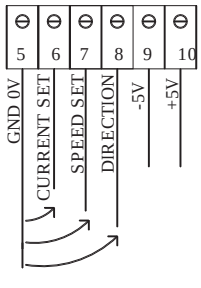

ELECTROMEN Oy Vähäheikkiläntie 56B, 20810 Turku, FINLAND Tel. +358-2-4693050 Fax. +358-2-4693052

EM-175 DC-MOTOR CONTROLLER 12/24Vdc 10A

FEATURES:

- Unidirectional
- 2-quadrant, drive and brake
- Dynamic and regenerative braking
- Smooth startup ramp
- Adjustable current limit
- Load compensation
- High efficiency
- High peak loading capacity
- Rail mountable

EM-175 motor driver is designed for DC-motor speed control. The unit regulates motor voltage so non regulated supply voltage is well suited. A load affecting the motor rpm can be compensated with an adjustble load compensation (RxI). Potentiometer or direct voltage signal can be used to give the speed control value. The current limit can be set with a trim or direct voltage signal to protect the motor and mechanics in jam situations.

Startup speed can be limited with so called ramp, which slowly rises the motor voltage in a desired way. Ramp time is set with a trim. The unit also features a brake input which can be used to rapidly brake motor (dynamic braking). There are two diffirent dynamic braking options available: in the first one even very short braking resets the set value and ramp time, that is after braking motor starts from zero rpm. The second braking method reduces ramp value during braking according to ramp time, in other words motor starts from ramp value after braking. When the unit is battery-operated, regenerative braking can be used. This method feeds the braking energy back to battery. Regenerative braking automatically activates when motor voltage exceeds set value, for example in a situation where set value is rapidly being reduced.

The freewheel command sets motor free from control. Freewheel overrides all other controls. EM-175 can be optimised for 12 or 24 V supply use.

TECHNICAL DATA

Supply	12-32Vdc
Overvoltage protection	40V
Idle current	approx. 20mA
Motor current	10A continuous (Ta<50°C)
	15A peak
Motor voltage	0-15V (12V setting)
	0-29V (24V setting)
Current limit	adj. 0...15A
Cur. lim. volt. contol	0...5V (0...15A)
Ramp time	adj. 0...3s
Voltage loss	1V (Im=10A)
Operating frequency	25kHz
Aux. voltage	5V 10mA
Control pot.	1-50kohm
Control volt. range	adj. 0-5V...0...10V
Digital inputs	"on" @ Uin 4 -30V
(brake and freewheel)	"off" @ Uin 0-1V or open impedance 10kohm
Operating temp	-20...+70
Dimensions	43x73x30mm
Weight	approx. 80g

EM-175 BLOCK DIAGRAM

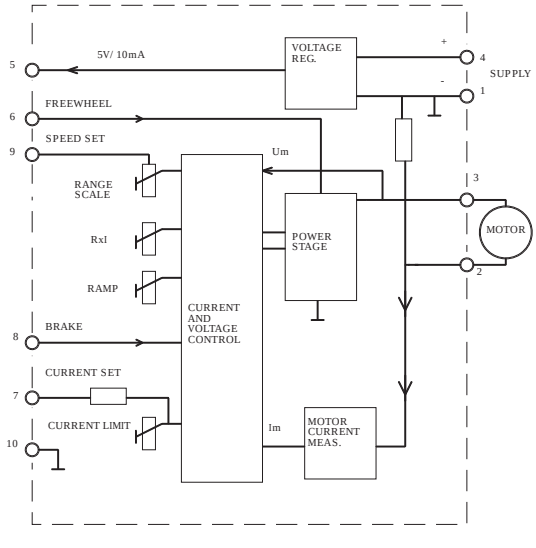

EM-175 OPERATING INSTRUCTIONS

Supply should be filtered 12-32Vdc,
max. ripple <30% on full load.
ATT. Wrong supply polarity can damage the driver.
ATT. Driver has no internal fuse.

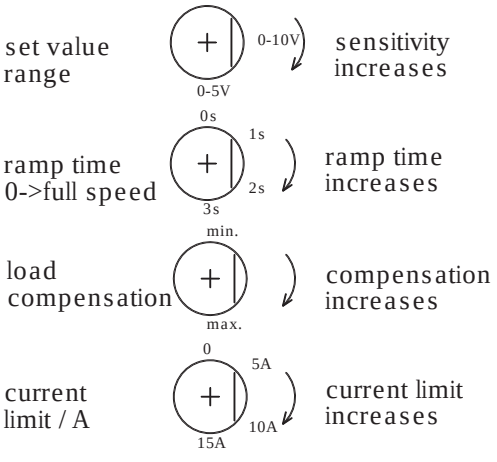

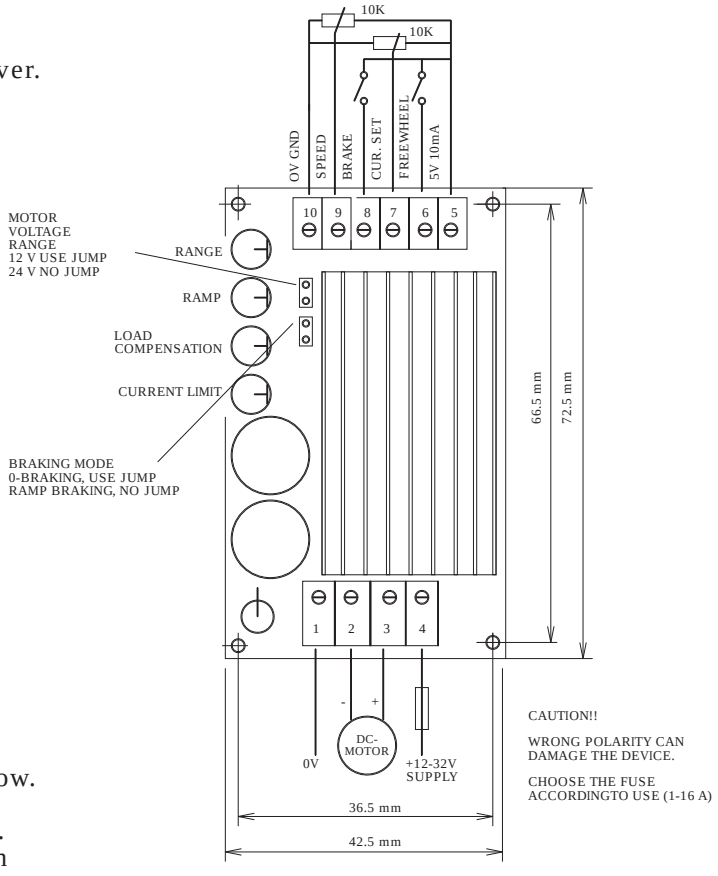

SETTINGS AND ADJUSTMENTS

Choose desired braking option, see picture below. Potentiometer or direct voltage signal 0-5 V ... 0-10 V can be used to set speed value. Acceleration and deceleration ramp are set with trims, 0-3 s, this is time from zero to full speed or from full speed to zero. Compensation adjustment: set motor on to a low rpm, add compensation until motor starts twiching and then reduce compensation until twitching ends. After this motor loading can be tested for steady motor run. Current limit can be set to 0-12 A, current limit can also be set using direct 0-5 V voltage signal or potentiometer. If the external control is used, turn the inbuilt current limit trim to 0-position.

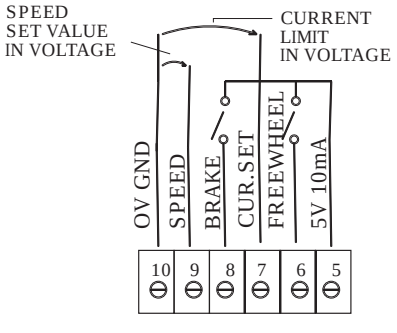

BRAKING OPTIONS

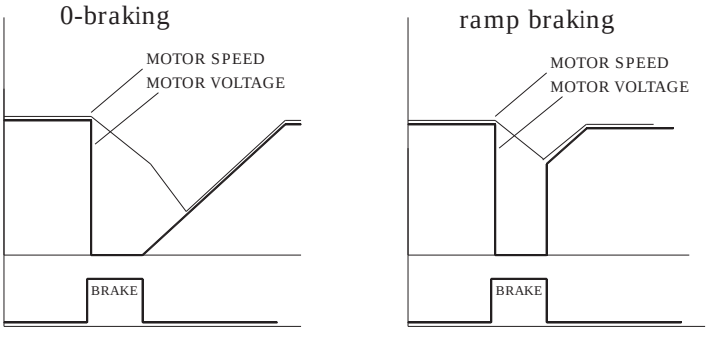

ELECTROMEN Oy Vähäheikkiläntie 56B, 20810 Turku, FINLAND Tel. +358-2-4693050 Fax. +358-2-4693052

EM-176 DC-MOTOR CONTROLLER 12/24Vdc 10A

FEATURES:

- 4 Quadrants
- Braking
- Freewheeling
- Reversal
- 0...10V control
- Optional ±10V control
- Soft start ramp
- Adjustable current limit
- Load compensation (RxI)
- High efficiency
- High peak loading capacity
- Rail mountable

EM-176 is designed for DC-motor speed control. The unit can be used with unregulated DC supply. Motor loading can be compensated with inbuilt RxI-type adjustment. EM-176 utilizes PWM driven H-bridge, thus achieves high efficiency and extensive controlling options. Speed control value can be set with voltage signal or with potentiometer, there is an auxiliary voltage signal output for potentiometer use. The scale trimmer can be used to scale set value to correspond better the motor rpm. An auxiliary card can be fitted into EM-176 for bipolar input controlling with voltage signal or potentiometer. The ramp feature is used to limit the motor start and brake speed, in other words soften the operation and prevent the occurrence of current spikes. The current limit limits motor torque that is current; this protects the motor and the mechanics. The unit has separate inputs for brake, freewheel and reverse. Brake short-circuits the motor poles and produces powerful braking. Freewheel detaches the power stage from the motor and leaves motor rotating freely. Reverse changes motor rotating direction, this is done using the set ramp times.
Brake and freewheel bypass the ramp feature.

TECHNICAL DATA:

Supply	12-35Vdc
Over voltage protection	39V
Idle current	appox. 30mA
Motor current	10A cont. (Ta<50°C)
	15A peak (20% on/ 80% off)
Motor voltage	0-29V (0-100%)
Current limit	adj. 0...15A
Current lim. volt. ctrl	0...5V (0...15A)
Ramp time	adj. 0...3s
Voltage loss	1.2V (Im=10A)
Operating freq.	25kHz
Aux. voltages	+5V 10mA (option -5V)
Set value range	0...5 or 0...10V
	(±5V or ±10V option)
Set value input imp.	100kohm (pin 7 and 9)
Control voltage	"on" when Uin 4 -30V
	"off" when Uin 0-1V or open
Control input imp.	10kohm (pin 5, 6 and 8)
Operating temp (Ta)	-20...+70
Measures	65x73x30mm
Weight	approx. 100g

EM-176 BLOCK DIAGRAM

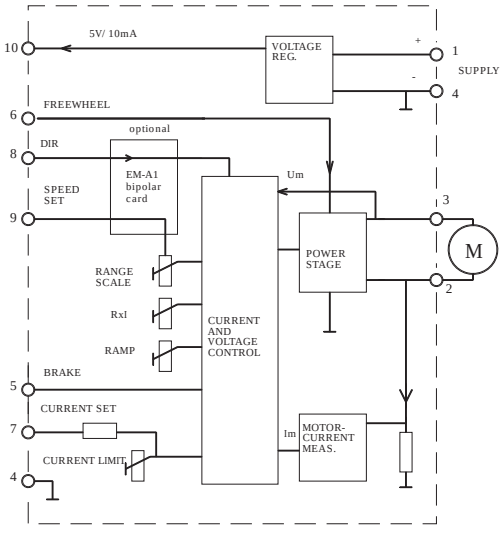

EM-176 WIRING AND INSTALLATION

INSTALLATION EM-176

Supply voltage 12-35VDC, ripple <30% at full load.
CAUTION ! Wrong polarity may damage the device.
CAUTION ! The device is not equipped with an internal fuse.

SETTINGS AND ADJUSTMENTS

Set trimmers in center position. Current limit can be set in the range of 0-15A. If an external voltage signal (0-5V) or potentiometer is used to set the current limit, set the inbuilt current limit trimmer to 0-position.

The compensation (RxI) is used as follows: first set the motor running slowly. Then increase compensation until the motor starts twitching. Now decrease compensation a little so that the twitching ends. Finally test the operation: when loading the motor, the rotation speed should almost remain constant.

The acceleration- and braking ramp are set with trimmers in the range of 0-3s (the time from zero to full speed or vice versa). The speed can be set with potentiometer or with 0-5V voltage signal. With the set value trimmer the set value range can be scaled to match the motor rotating speed range.

If the use of bipolar control signal is desired, an auxiliary card EM-A1 can be fitted onboard, which makes it possible to use either ±5V or ±10V control voltage signals. EM-A1 card also gives -5V auxiliary voltage into pin8; this enables potentiometer to be used to control both speed and direction (forward-stop-reverse).

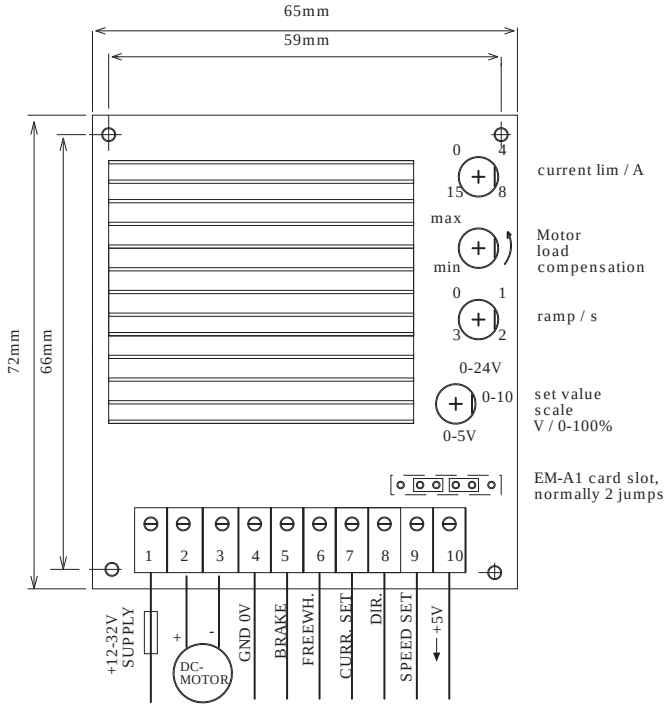

CAUTION !
Wrong polarity can damage the device.
Select a fuse (1-16A) in accordance with the application.

EXAMPLE 1

CONTROLLING WITH SWITCHES.
SPEED SET WITH POTENTIOMETER.
SPEED RANGE ADJUSTABLE WITH SPEED SET RANGE ADJUSTMENT.

CURRENT LIMIT CAN BE SET WITH INBUILT TRIMMER. IF EXTERNAL ADJUSTMENT IS USED, SET THE INBUILT CURRENT LIMIT TRIMMER TO MINIMUM.

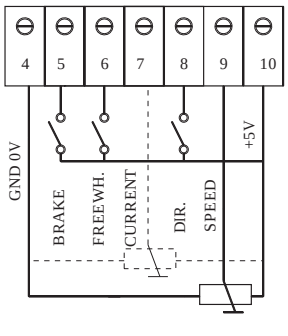

EXAMPLE 2

CONTROLLING WITH VOLTAGES.

CURRENT 0-5V CORRESPONDS TO 0-15A.
CURRENT LIMIT TRIMMER IS SET TO MIN.

SPEED 0-5V CORRESPONDS TO 0-100% SPEED. SCALE WITH TRIMMER.

DIRECTION, FREEWHEEL OR BRAKE 0-1V OR OPEN=OFF, 4-30V=ON.

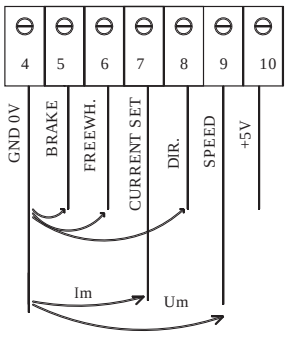

EXAMPLE 3 (OPTIONAL)

EM-A1 BIPOLAR-CARD INSTALLED.

CONTROLLING WITH POTENTIOMETER FORWARD/REVERSE OR WITH VOLTAGE SIGNAL (±5V OR LARGER BIPOLAR VOLTAGE). RANGE ADJUSTABLE WITH RANGE SCALE TRIMMER ADJUSTMENT.

OTHER CONTROLS AS IN PREVIOUS EXAMPLES.

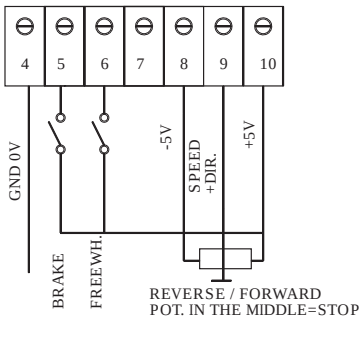

ELECTROMEN Oy Vähäheikkiläntie 56B, 20810 Turku, FINLAND Tel. +358-2-4693050 Fax. +358-2-4693052

EM-180 ON-OFF DC-MOTOR DRIVER 12/24Vdc 10A

FEATURES:

- Fast change of direction
- Soft start-up, acceleration ramp
- Settable current limit
- Trip or continuous current limit
- High efficiency
- Dynamic braking
- High momentary load capacity
- Rail base fittable
- Freewheel option
- Two control modes

EM-180 is developed for controlled ON-OFF driving and direction change of a DC-motor with brushes. Driver has advanced current limit features. It limits the motor current in start-up and jam-situations and that way protects the motor and mechanics from over torque. Driver has also an error output to indicate error / over current situations.

The acceleration ramp time for start-up is adjustable to suit each application. In other word the motor voltage is slowly rised to give a smooth start-up. As the control is set off, the motor is dynamically braked with so called short-circuit braking. The motor poles are connected together. The reverse and forward commands can be set with positive or negative control. The freewheel command sets motor run free. Freewheel overrides forward and backwards commands.

The current protection is double acting. First there is a continuous and adjustable current limit which decreases the motor voltage if the current exceeds the adjusted value. Second there is settable trip feature that cuts the motor voltage if the current limit value is exceeded (after trip delay 2ms). After trip the motor starts only to the opposite direction. Additionally the driver doubles the adjusted current value for 0.3 seconds in start-up to ensure sufficient power to overcome the start-up friction. Error output indicates the activation of the current limit.

TECHNICAL DATA

Supply	12-32Vdc
Over voltage protection	40V
Idle current	app. 30mA
Driving current	10A continuous 15A 50/50%
Current limit	1...15A 2...30A in start-up
Current trip delay	n. 2ms
Start delay	5ms
Stop delay	5ms
Direction change time	n. 20ms
Voltage loss	0.5V (Im=10A)
Operating frequency	500Hz
Ramp	0.10, 20, 40, 80 150ms 0.25, 0.5, 1s
Digital inputs	"off" @ Uin 4 -30V or open "on" @ Uin 0-1V
Error output	max 30V 50mA
Operating temp (Ta)	-20...+70ºC
Measures	43x73x35mm
Weight	app. 80g

EM-180 BLOCK DIAGRAM

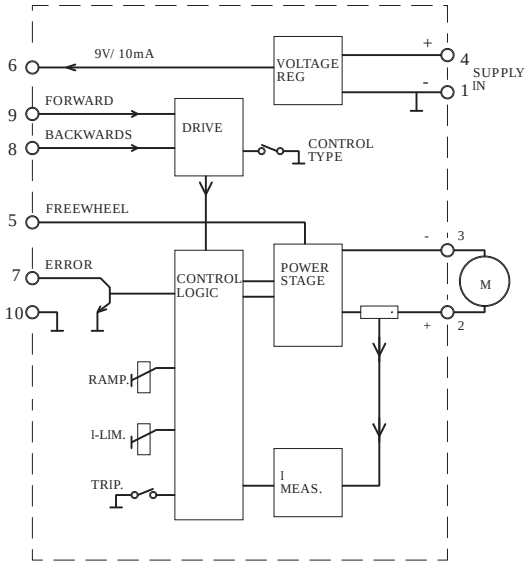

EM-180 OPERATING INSTRUCTIONS

Supply should be filtered 12-32Vdc,
max. ripple <30% on full load.
ATT. Wrong supply polarity can damage the driver.
ATT. Driver has no fuse in it.

Choose the current limit mode: continuous/tripping
Trip jumper: on=tripping limit, off=continuous limit

Choose control mode (forward / backwards)
pos = PNP positive control
neg = NPN negative control

Choose the ramp time

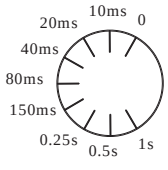

Choose the current limit value / Amps.

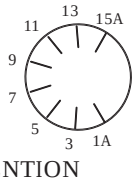

ATTENTION
- The current limit values can be affected by the used motor.
- In start-up the current limit value is doubled (for 0.3s).

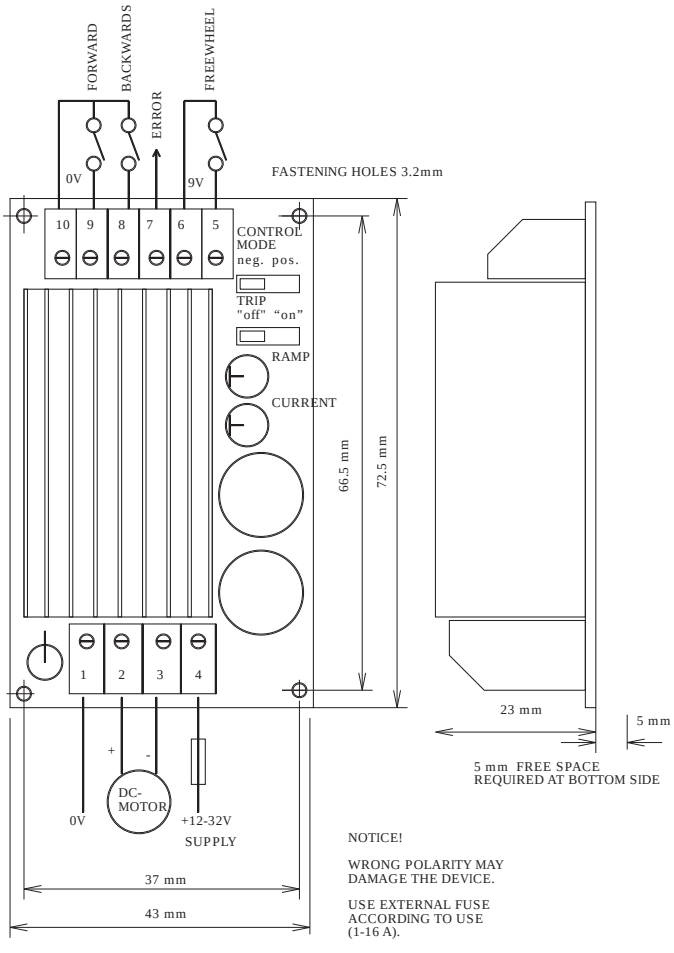

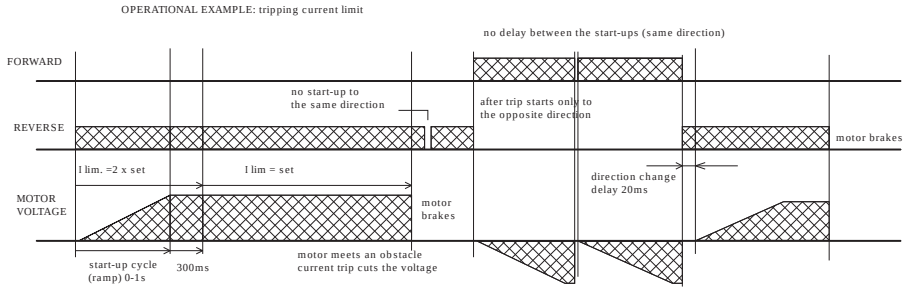

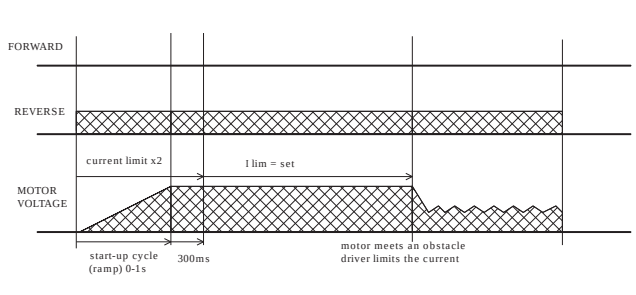

ELECTROMEN Oy Vähäheikkiläntie 56B, 20810 Turku, FINLAND Tel. +358-2-4693050 Fax. +358-2-4693052

EM-185 DC-MOTOR SPEED REGULATOR 12/24Vdc 3A

FEATURES:

- 1-quadrant
- Panel mountable
- Small size
- Motor size 5-80W
- Good speed regulation
- Load comp. adjustable RxI
- Adjustable current limit
- EMC tested (CE marked)
- Overload and short-circuit protected

EM-185 is a PWM-based DC-motor driver. The materials and features meet the industrial environment requirements. The device is CE marked and has been tested through EMC measurements required by industrial environment. Motor voltage is regulated against supply voltage changes, and there is also a load compensation (RxI) adjustment. Thanks to these features EM-185 offers good performance in motor speed control applications. The current limit and the rpm range are adjustable with trimmer potentiometers. The power stage of the device is protected against short-circuit and overload (over temp.). EM-185 is easy to mount in a 10mm hole in an assembly panel.

TECHNICAL DATA

Supply voltage	12-24Vdc (10...35V)
Idle current max.	20mA
Motor current cont.	max 3A (Ta<50°C)
Motor current peak	max 6A (10s.)
Short circuit current	max 30A
Current limit adj.	0.5-6A
PWM motor-frequency	25kHz
Motor and supply connectors	1.5mm
EMC	EN 50081-2
	EN 50082-2
Weight	75g
Operating temp (Ta)	0-60°C

EM-185 BLOCK DIAGRAM

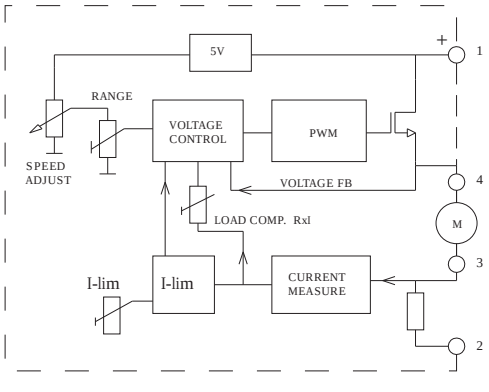

EM-185 OPERATING INSTRUCTIONS

Supply should be filtered 10-35Vdc,
max. ripple <20% on full load.

Current limit (I-lim) limits the motor current, in other words the motor torque. This adjustment is set according to the motor nominal current or within application.

RxI is always set to minimum in the beginning. After this set a motor rpm of 20-30%, slowly increase the compensation and try loading the motor simultaneously. When motor rpm is no longer affected by the loading, the compensation adjustment is in balance. If motor starts to twitch or accelerate when loading is applied, there is too much compensation.

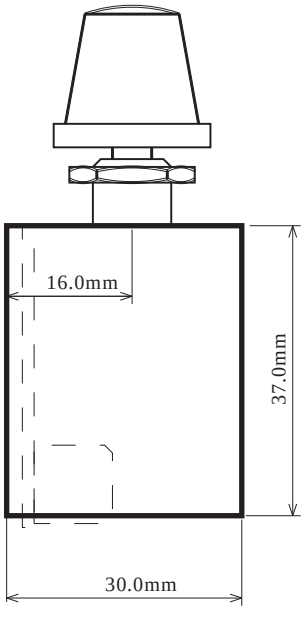

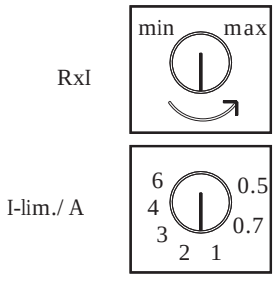

Potentiometer position / Motor voltage

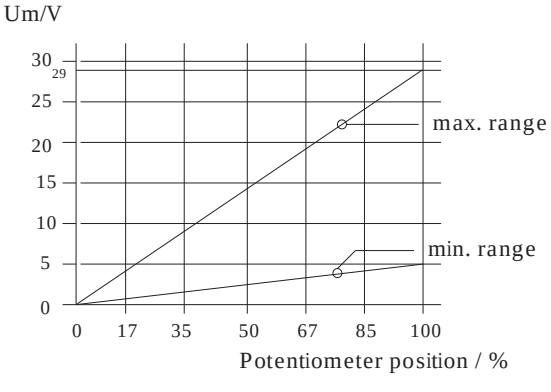

Range is adjustable with range trim

0% = potentiomer full counter clockwise
100% = potentiometer full clockwise

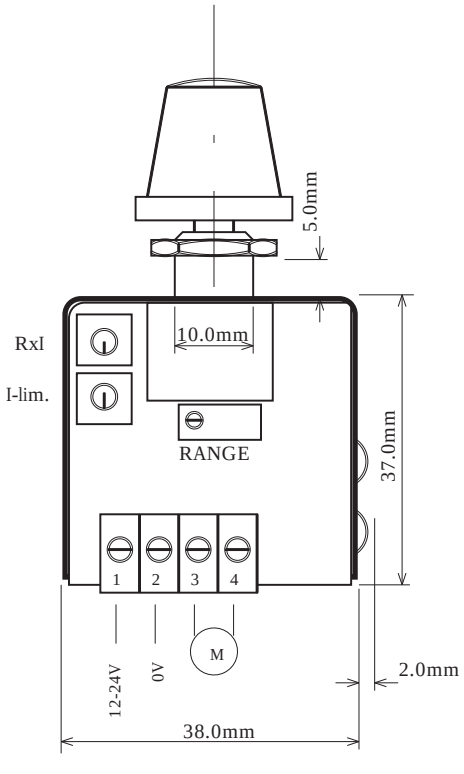

ELECTROMEN Oy Vähäheikkiläntie 56B, 20810 Turku, FINLAND Tel. +358-2-4693050 Fax. +358-2-4693052

EM-186 STEPPER MOTOR MICROSTEPPING CONTROLLER UNIT 15-42V 1-8A

FEATURES:

- Bipolar chopper
- Wide supply voltage range
- Full-, half-, quarter-, and eighth-step operation
- 8-programmable phase currents
- Auxiliary oscillator
- Acceleration- and braking ramp
- Power reduction
- Very high efficiency
- Low heat dissipation
- Rail mounting base available

EM-186 is bipolar-chopper type stepper motor controller. Bipolar operation suits most stepper motors and provides the best torque. The microstepping feature gives high performance also at low rpm. The power stage is mosfet-type so it runs with very high efficiency.

There are four stepping modes: full, half, quarter and eighth. Desired mode is set with two control inputs. The phase current (current limit) can be set in eight different levels using dip-switches.
A wide phase current set range makes it possible to use the device with several different motors. Automatic power reduction will drop phase current when stepping pulses stop coming.

The controller features an auxiliary oscillator, which has 7 preprogrammed frequencies. The frequency is set with three control inputs. Auxililary oscillator in EM-186 has also an acceleration ramp feature, which can be used to change frequencies flexibly, so that the motor will start up reliably even at high frequencies. The acceleration ramp time is set with a trim.

The inputs operate with so called positive logic, in other words the inputs are activated with connecting the input to positive voltage. The inputs also work with TTL-logic level control.

TECHNICAL DATA:

Operating voltage	15-42Vdc
Idle current	approx. 25mA (enable "0")
Current set	1,2,3,4 5,6,7 and 8A
Voltage loss	1V when Im=1A
Aux. osc. freq.	200, 500, 1000, 2000 Hz 3000, 5000, 8000 Hz
Ramp speed	0,2...3s (0...8000 Hz)
Aux. freq. precision	better than 0,5%
Digital control	"on" when Uin 4 -30V "off" when Uin 0-1V or open
Stepping options	1,1/2,1/4,1/8 step
Power reduction	-70%
Power reduction delay	100ms from last pulse
Step freq.	max. 15 kHz
Operating temp.	0-50°C
Dimensions	90x107x30mm
Weight	approx. 180g

EM-186 BLOCK DIAGRAM

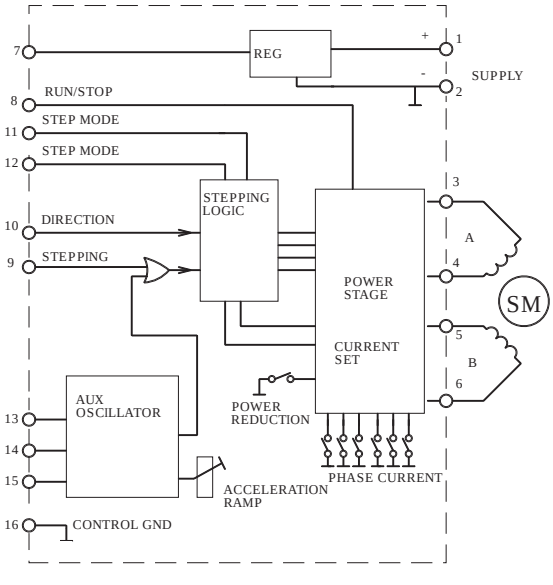

EM-186 WIRING AND INSTALLATION

Supply voltage 15-42Vdc, ripple less than 20%
Make sure that the current feed capability of the voltage source is adequate for the application.
The undervoltage situation can cause undesired effects for the function.

The phase current is set with PHASE CURRENT switch (see the table below). Notice that the motor do not always need the nominal phase current. Often the motor works better with lower than the nominal current. Find the best current for your application, but do not exceed the nominal current of the motor.

Control inputs are activated using switches or voltage signal. Driver has a positive control logic 5...30V = "on" , 0-1V or OPEN = "off"

There are four stepping modes : full, half, 1/4 and 1/8. The full-step is good for higher speeds. The 1/8-step gives best resolution on positioning use, and also the smoothest run on low speeds. Stepping mode is selected with STEP MODE inputs A & B (look at table below).

If used with external stepping frequency source, connect frequency signal to STEP PULSE input. Incoming pulse level should be 4-30V, frequency max.15kHz and minimum pulse lenght 25us.
Internal stepping source (aux. oscillator) is set with AUX. OSC. inputs 1,2 and 3 (see the table).
Aux. oscillator includes also the acceleration RAMP. It gives a smooth start towards the selected frequency. The ramp time can be adjusted from 0.2 to 3sec.
The AUX. OSC. frequencies and the RAMP time are based on 20MHz crystal frecuency. The chrystal can be changed to be anything between 4...20MHz.
The AUX. OSC. frequencies and ramp time are changed in the same proportion.

ENABLE has the highest priority.
NOTE. If ENABLE input is "off" the output stage is turned off, (output current is off) and also the AUX. OSC is reset. So every time when the ENABLE input is turned "on" the AUX. OSC. starts with the acceleration ramp.

DIRECTION input is used to change the rotating direction. Direction change does not include the RAMP function in it self. But if it is used with the ENABLE input the ramp and the smooth direction change can be achieved.

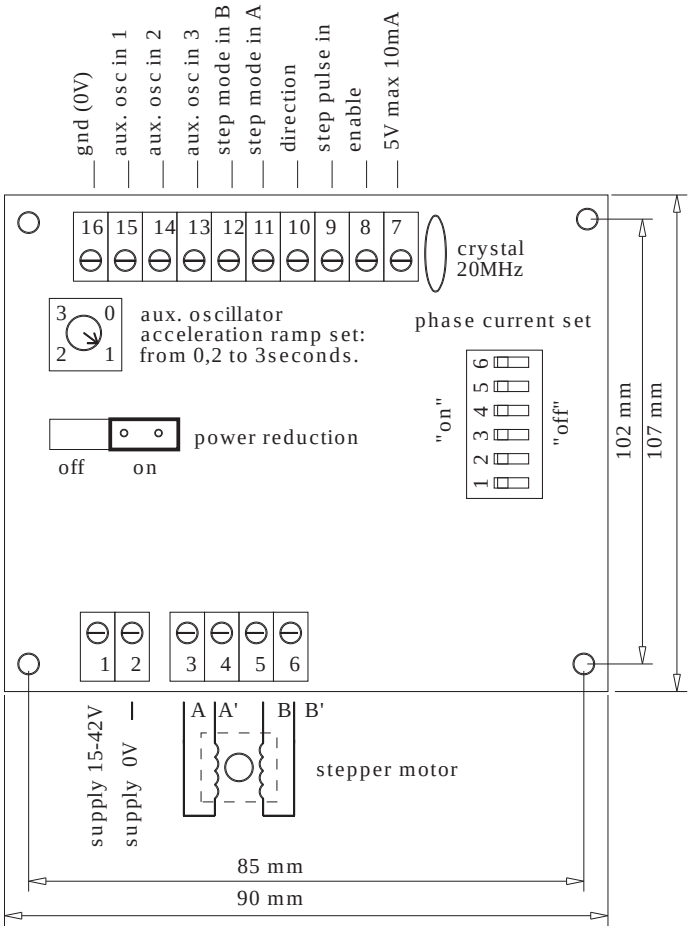

STEP MODE SET

full step: input A and B "off"
half step: input A "on", B "off"
1/4 step: input A "off", B"on"
1/8 step: input A and B "on"

PHASE CURRENT SET

1A all "off"
2A 1 and 4 "on", others "off"
3A 2 and 5 "on", others "off"
4A 1,2,4,5 "on", others "off"
5A 3 and 6 "on", others "off"
6A 1,3,4,6 "on", others "off"
7A 2,3,5,6 "on", others "off"
8A all "on"

AUX. OSCILLATOR FREQ.
(with 20MHz crystal)

stop all aux. osc. input "off"
200Hz in1 "on", others "off"
500Hz in2 "on", others "off"
1000Hz in1,2 "on", others "off"
2000Hz in3 "on", others "off"
3000Hz in1,3 "on", others "off"
5000Hz in2,3 "on", others "off"
8000Hz all aux. osc. input "on"

ELECTROMEN Oy Vähäheikkiläntie 56B, 20810 Turku, FINLAND Tel. +358-2-4693050 Fax. +358-2-4693052

EM-186-72 STEPPER MOTOR MICROSTEPPING CONTROLLER UNIT 20-80V 0.8-5A

FEATURES:

- Bipolar chopper
- Wide supply voltage range
- Full-, half-, quarter-, and 1/8-step operation
- 8-programmable phase currents
- Auxiliary oscillator
- Acceleration- and braking ramp
- Power reduction
- Very high efficiency
- Low heat dissipation
- Rail mounting base available

EM-186-72 is bipolar-chopper type stepper motor controller. Bipolar operation suits most stepper motors and provides the best torque. The microstepping feature gives high performance also at low rpm. The power stage is mosfet-type so it runs with very high efficiency.

There are four stepping modes: full, half, quarter and eighth. Desired mode is set with two control inputs. The phase current (current limit) can be set in eight different levels using dip-switches.
A wide phase current set range makes it possible to use the device with several different motors. Automatic power reduction will drop phase current when stepping pulses stop coming.

The controller features an auxiliary oscillator, which has 7 preprogrammed frequencies. The frequency is set with three control inputs. Auxililary oscillator in EM-186-72 has also an acceleration ramp feature, which can be used to change frequencies flexibly, so that the motor will start up reliably even at high frequencies. The acceleration ramp time is set with a trim.

The inputs operate with so called positive logic, in other words the inputs are activated with connecting the input to positive voltage. The inputs also work with TTL-logic level control.

TECHNICAL DATA:

Operating voltage	20-80Vdc
Idle current	approx. 25mA (enable "0")
Current set	0,8; 1,4; 2; 2,6 3,2; 3,8; 4,4; 5,0A
Voltage loss	1V when Im=1A
Aux. osc. freq.	200, 500, 1000, 2000 Hz 3000, 5000, 8000 Hz
Ramp speed	0,2...3s (0...8000 Hz)
Aux. freq. precision	better than 0,5%
Digital control	"on" when Uin 4 -30V "off" when Uin 0-1V or open
Stepping options	1,1/2,1/4,1/8 step
Power reduction	-70%
Power reduction delay	100ms from last pulse
Step freq.	max. 15 kHz
Operating temp.	0-50°C
Dimensions	90x107x30mm
Weight	approx. 180g

EM-186 BLOCK DIAGRAM

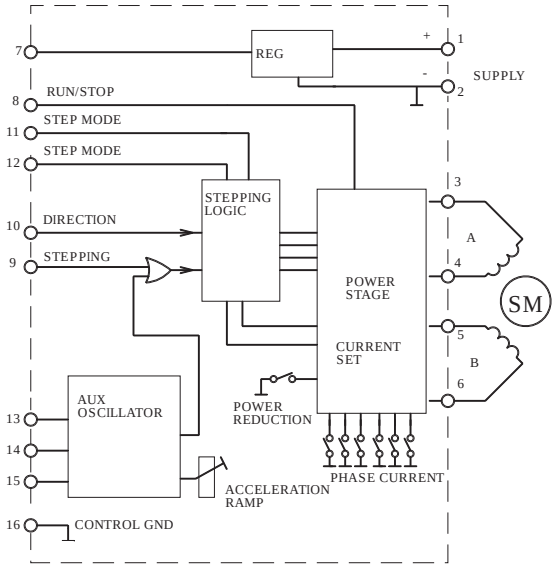

EM-186-72 WIRING AND INSTALLATION

Supply voltage 20-80Vdc, ripple less than 20%
Make sure that the current feed capability of the voltage source is adequate for the application.
The undervoltage situation can cause undesired effects for the function.

The phase current is set with PHASE CURRENT switch (see the table below). Notice that the motor do not always need the nominal phase current. Often the motor works better with lower than the nominal current. Find the best current for your application, but do not exceed the nominal current of the motor.

Control inputs are activated using switches or voltage signal. Driver has a positive control logic 5...30V = "on" , 0-1V or OPEN = "off"

There are four stepping modes : full, half, 1/4 and 1/8. The full-step is good for higher speeds. The 1/8-step gives best resolution on positioning use, and also the smoothest run on low speeds. Stepping mode is selected with STEP MODE inputs A & B (look at table below).

If used with external stepping frequency source, connect frequency signal to STEP PULSE input. Incoming pulse level should be 4-30V, frequency max.15kHz and minimum pulse lenght 25us.
Internal stepping source (aux. oscillator) is set with AUX. OSC. inputs 1,2 and 3 (see the table).
Aux. oscillator includes also the acceleration RAMP. It gives a smooth start towards the selected frequency. The ramp time can be adjusted from 0.2 to 3sec.
The AUX. OSC. frequencies and the RAMP time are based on 20MHz crystal frecuency. The chrystal can be changed to be anything between 4...20MHz.
The AUX. OSC. frequencies and ramp time are changed in the same proportion.

ENABLE has the highest priority.
NOTE. If ENABLE input is "off" the output stage is turned off, (output current is off) and also the AUX. OSC is reset. So every time when the ENABLE input is turned "on" the AUX. OSC. starts with the acceleration ramp.

DIRECTION input is used to change the rotating direction. Direction change does not include the RAMP function in it self. But if it is used with the ENABLE input the ramp and the smooth direction change can be achieved.

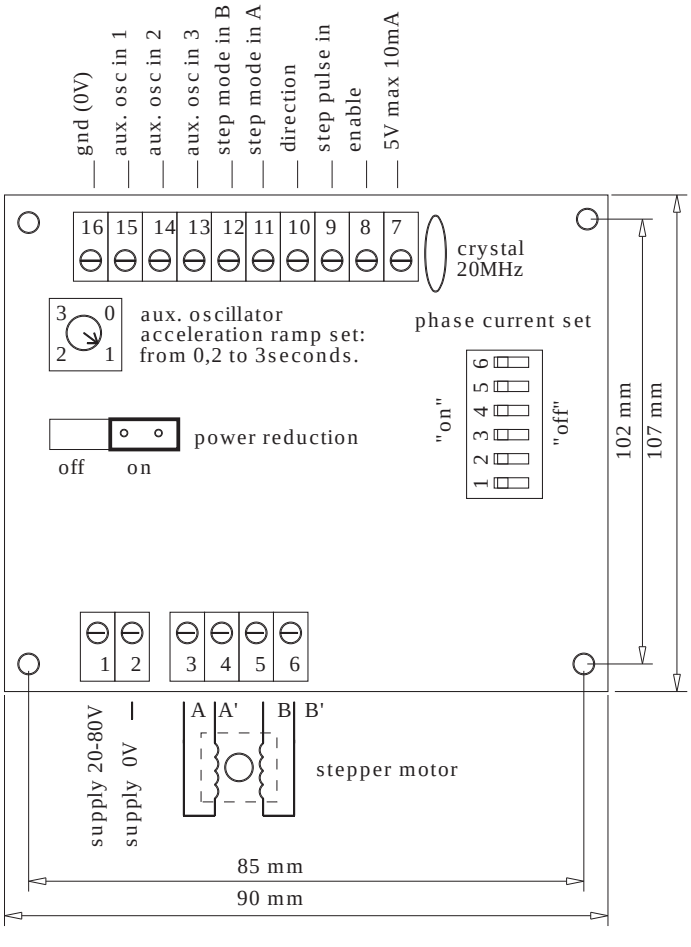

STEP MODE SET

full step: input A and B "off"
half step: input A "on", B "off"
1/4 step: input A "off", B"on"
1/8 step: input A and B "on"

PHASE CURRENT SET

0.8A all "off"
1.4A 1 and 4 "on", others "off"
2.0A 2 and 5 "on", others "off"
2.6A 1,2,4,5 "on", others "off"
3.2A 3 and 6 "on", others "off"
3.8A 1,3,4,6 "on", others "off"
4.2A 2,3,5,6 "on", others "off"
5.0A all "on"

AUX. OSCILLATOR FREQ.
(with 20MHz crystal)

stop all aux. osc. input "off"
200Hz in1 "on", others "off"
500Hz in2 "on", others "off"
1000Hz in1,2 "on", others "off"
2000Hz in3 "on", others "off"
3000Hz in1,3 "on", others "off"
5000Hz in2,3 "on", others "off"
8000Hz all aux. osc. input "on"

ELECTROMEN Oy Vähäheikkiläntie 56B, 20810 Turku, FINLAND Tel. +358-2-4693050 Fax. +358-2-4693052

EM-206 BRUSHLESS MOTOR CONTROLLER 12-36V 10A

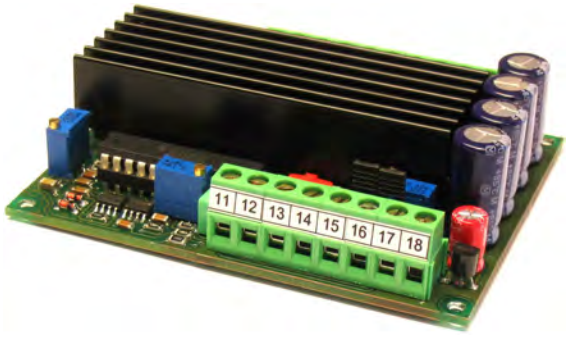

FEATURES:

- Three phase output
- Continuous speed adjustment
- Reversing
- Braking
- ±10V control option
- Hall sensor supply and input
- 60º or 120º commutation
- Settable / controllable current limit
- Fault output
- Open or closed loop activity
- High efficiency
- Rail base mountable

EM-206 is a DC-motor controller that is designed for brushless motors with hall sensor feedback. The unit has a mosfet-type high efficiency power stage. EM-206 can be connected to motors using 60º or 120º commutation. The unit is equipped with standard controls, such as speed, stop, reversing and braking. Mechanical installation can be done with screws or by using a rail mounting base.

There are two control options. Direct control (open loop) sets motor voltage in proportion to control voltage, as with a standard DC-motor. Frequency locked control (closed loop) uses hall sensor feedback for speed set besides commutation set. This way a precise speed control is attained. Closed loop response can be altered so that the adjustment remains stabile in given application. Speed control signal can be scaled with trimmers.

Current limit restricts motor torque when motor current exceeds set value. Current limit can be set with a trimmer or with external signal. Fault output indicates the operation of the current limit. EM-206 is protected against surge voltage and overheating (excess load). The unit requires an external fuse.
As an option, EM-A1 expansion card can be installed, this makes it possible to control EM-206 with ±10V signal.

TECHNICAL DATA:

Supply voltage	12...36 Vdc
Over voltage protect.	39Vdc
Idle current	approx. 50mA
Motor current	10A rms 15A 50/50%
Current limit	0...15A
Current limit input	0-5V corresponds to 0-15A (input imp. 10k)
Thermal protection	120ºC (heat sink)
Voltage loss	0.8V @ Im=10A
Control voltage	0-10V (0-5V adjustable)
Control potentiometer	2-10k
Control voltage output	5V (max 10mA)
Hall voltage output	6.5V
Digital control	“high” @ Uin=3...30V “low” @ Uin=0...1V or open
Control Input impedance	10k
Fault output	NPN open coll. 30V 10mA
Dimensions	89x73x25mm
Weight	approx. 130g

EM-206 BLOCK DIAGRAM

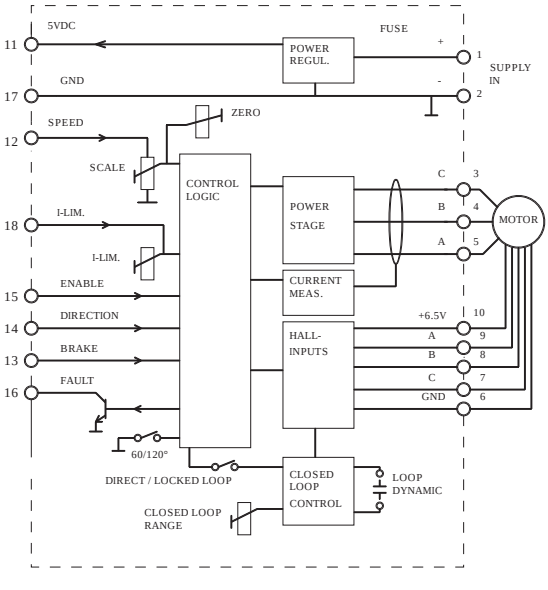

ELECTROMEN Oy Vähäheikkiläntie 56B, 20810 Turku, FINLAND Tel. +358-2-4693050 Fax. +358-2-4693052

EM-206 OPERATING INSTRUCTIONS

Operating voltage 12-36V filtered, with less than 20% ripple.
An external supply fuse is recommeded, suitable values 1-12A.

Speed control set with voltage or potentiometer. Range is adjustable with SCALE and ZERO trim.
The recommeded pot. value is 2-10k , the control voltage signal should be 0-5V or 0-10V.
There is option for ±10V control input if EM-A1 is assembled. Otherwise use two jumpers.
Speed input impedance of is 100kohm.
Speed control mode NORMAL or CLOSED LOOP is selected with SW1.
Normal speed control: Motor acts like a normal DC-motor without feedback.
Closed loop control: The control unit uses a hall sensor signal to regulate motor speed.
Accuracy of the motor rpm is typically ±1% in this mode.
The useable rpm range in closed loop mode is selected with "CLOSED LOOP RANGE" trimmer.
The loop dynamic behaviour can be changed with LOOP DYNAMIC CAPASITOR. The capasitor is asembled to socket, and it is easily exchanged.
Recommended value is 47nF...1000nF.

Current limit adjust (I-LIM) limits the motor current (torque). Normally current limit is set with I-lim trimmer.
If external I-lim control voltage is preferred, I-lim trim must be set to minimum, and control pin 18 connected to a potentiometer or a voltage signal of 0-5V (adj. range 0-15A). Input impedance of pin 18 is 10kohm.

Connection example:
control with pot. and switches

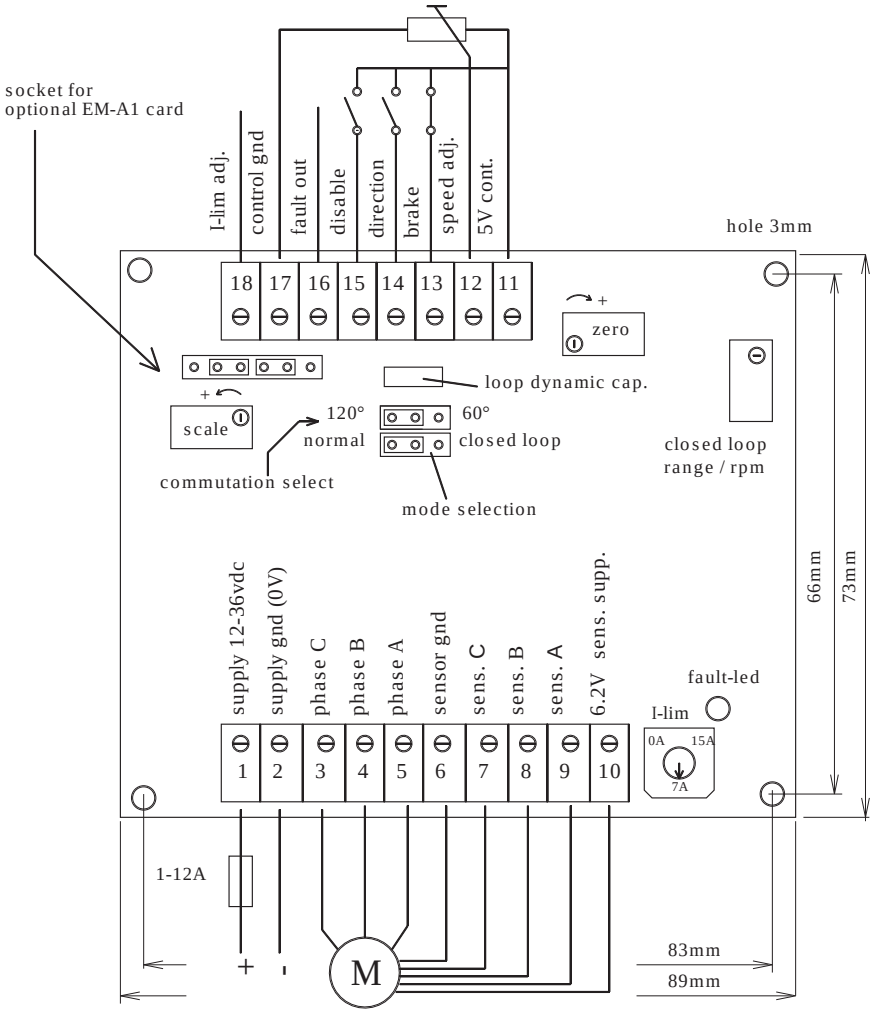

FAULT-output is pulled down and FAULT LED is lighted if at least one of the following conditions occurs:
- undervoltage
- current limit
- sensor fault
- disable input selected

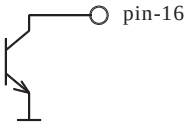

Brake input: pin 13 — Brakes if "low"; connected to GND or open (brake has higher priority than disable). This function short-circuits motor wiring.

Direction in: pin 14 — "high" voltage 4-30V for reverse

Disable in: pin 15 — "high" voltage 4-30V disables output (motor freewheeling)

ELECTROMEN Oy Vähäheikkiläntie 56B, 20810 Turku, FINLAND Tel. +358-2-4693050 Fax. +358-2-4693052

EM-206-48 BRUSHLESS MOTOR CONTROLLER **20**-**56**V 5A

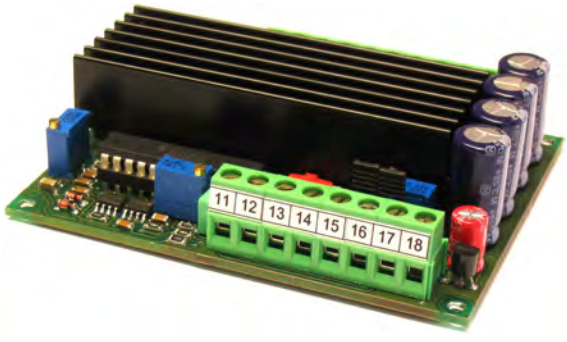

FEATURES:

- Three phase output
- Continuous speed adjustment
- Reversing
- Braking
- ±10V control option
- Hall sensor supply and input
- 60º or 120º commutation
- Settable / controllable current limit
- Fault output
- Open or closed loop activity
- High efficiency
- Rail base mountable

EM-206 is a DC-motor controller that is designed for brushless motors with hall sensor feedback. The unit has a mosfet-type high efficiency power stage. EM-206 can be connected to motors using 60º or 120º commutation. The unit is equipped with standard controls, such as speed, stop, reversing and braking. Mechanical installation can be done with screws or by using a rail mounting base.

There are two control options. Direct control (open loop) sets motor voltage in proportion to control voltage, as with a standard DC-motor. Frequency locked control (closed loop) uses hall sensor feedback for speed set besides commutation set. This way a precise speed control is attained. Closed loop response can be altered so that the adjustment remains stabile in given application. Speed control signal can be scaled with trimmers.

Current limit restricts motor torque when motor current exceeds set value. Current limit can be set with a trimmer or with external signal. Fault output indicates the operation of the current limit. EM-206 is protected against surge voltage and overheating (excess load). The unit requires an external fuse.
As an option, EM-A1 expansion card can be installed, this makes it possible to control EM-206 with ±10V signal.

TECHNICAL DATA:

Supply voltage	20...56 Vdc
Over voltage protect.	58Vdc
Idle current	approx. 50mA
Motor current	5A rms 7A 50/50%
Current limit	0...8A
Current limit input	0-5V corresponds to 0-8A (input imp. 10k)
Thermal protection	120ºC (heat sink)
Voltage loss	0.8V @ Im=5A
Control voltage	0-10V (0-5V adjustable)
Control potentiometer	2-10k
Control voltage output	5V (max 10mA)
Hall voltage output	6.5V
Digital control	“high” @ Uin=3...30V “low” @ Uin=0...1V or open
Control Input impedance	10k
Fault output	NPN open coll. 30V 10mA
Dimensions	89x73x25mm
Weight	approx. 130g

EM-206 BLOCK DIAGRAM

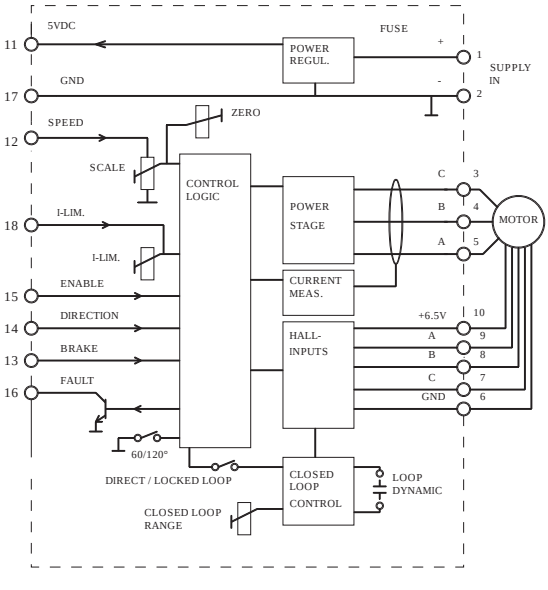

ELECTROMEN Oy Vähäheikkiläntie 56B, 20810 Turku, FINLAND Tel. +358-2-4693050 Fax. +358-2-4693052

EM-206-48 OPERATING INSTRUCTIONS

Operating voltage 20-56V filtered, with less than 20% ripple.
An external supply fuse is recommeded, suitable values 1-8A.

Speed control set with voltage or potentiometer. Range is adjustable with SCALE and ZERO trim.
The recommeded pot. value is 2-10k , the control voltage signal should be 0-5V or 0-10V.
There is option for ±10V control input if EM-A1 is assembled. Otherwise use two jumpers.
Speed input impedance of is 100kohm.
Speed control mode NORMAL or CLOSED LOOP is selected with SW1.
Normal speed control: Motor acts like a normal DC-motor without feedback.
Closed loop control: The control unit uses a hall sensor signal to regulate motor speed.
Accuracy of the motor rpm is typically ±1% in this mode.
The useable rpm range in closed loop mode is selected with "CLOSED LOOP RANGE" trimmer.
The loop dynamic behaviour can be changed with LOOP DYNAMIC CAPASITOR. The capasitor is asembled to socket, and it is easily exchanged.
Recommended value is 47nF...1000nF.

Current limit adjust (I-LIM) limits the motor current (torque). Normally current limit is set with I-lim trimmer.
If external I-lim control voltage is preferred, I-lim trim must be set to minimum, and control pin 18 connected to a potentiometer or a voltage signal of 0-5V (adj. range 0-8A). Input impedance of pin 18 is 10kohm.

Connection example:
control with pot. and switches

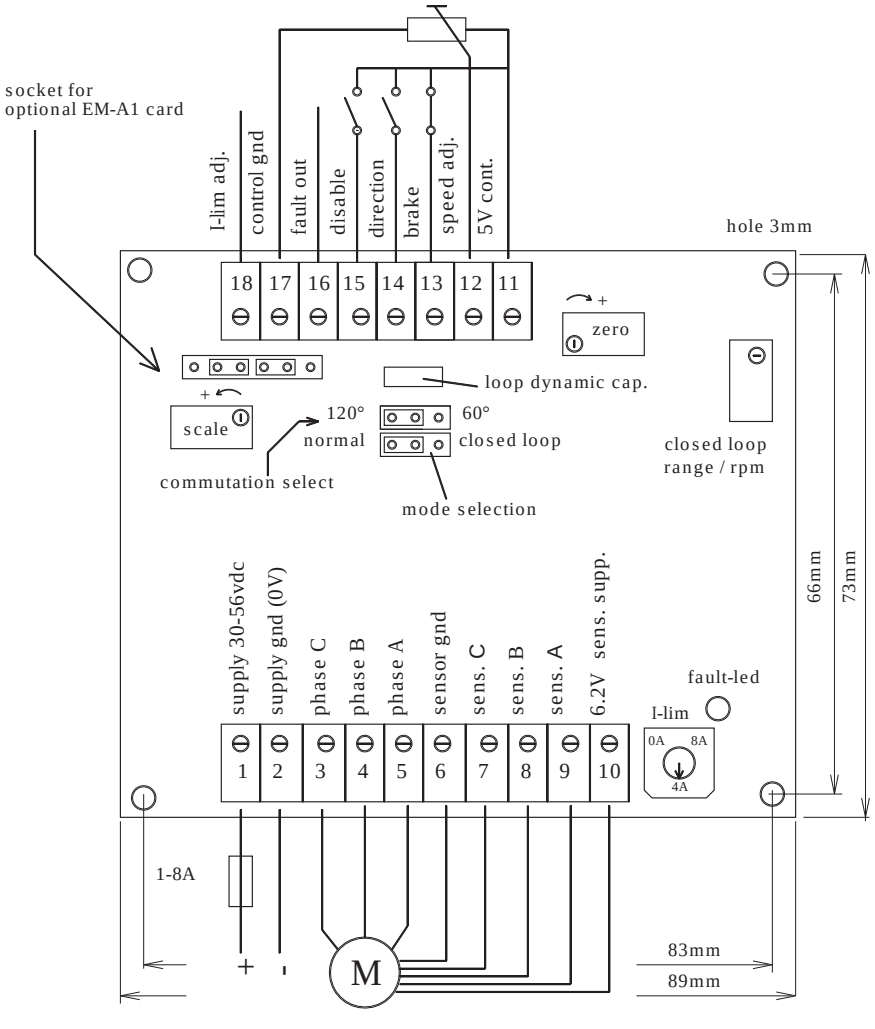

FAULT-output is pulled down and FAULT LED is lighted if at least one of the following conditions occurs:
- undervoltage
- current limit
- sensor fault
- disable input selected

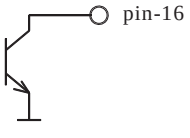

Brake input: pin 13 — Brakes if "low"; connected to GND or open (brake has higher priority than disable). This function short-circuits motor wiring.

Direction in: pin 14 — "high" voltage 4-30V for reverse

Disable in: pin 15 — "high" voltage 4-30V disables output (motor freewheeling)

ELECTROMEN Oy Vähäheikkiläntie 56B, 20810 Turku, FINLAND Tel. +358-2-4693050 Fax. +358-2-4693052

EM-213 1-QUADRANT POWER CONTROLLER 12-24Vdc 10A

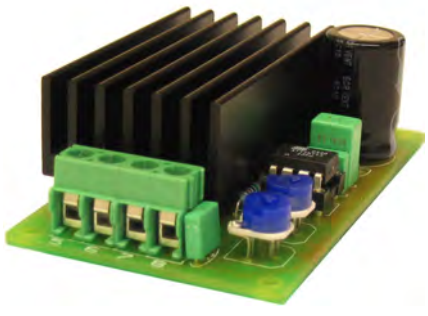

FEATURES:

- Low cost
- High efficiency
- Operating voltage compensated
- For resistive or inductive loads
- Applications: motor speed control, lamp dimmer
- Rail base fittable

EM-213 is a 1-quadrant power controller. The controller uses PWM principle with high efficiency. The PWM frequency can be set to high or low mode. High frequency is used with inductive (motor) load and low with resistive (lamp) load. The output of the device is compensated against power supply changes, so the device can be used succesfully with unregulated power supply. Output is overload (overheat) protected. The protection recovers by itself as temperature decreases. Control of device is done with analog voltage signal 0-5V or more, range of this signal is adjustable. EM-213 also includes a soft-start ramp with adjustable time.

EM-213 BLOCK DIAGRAM

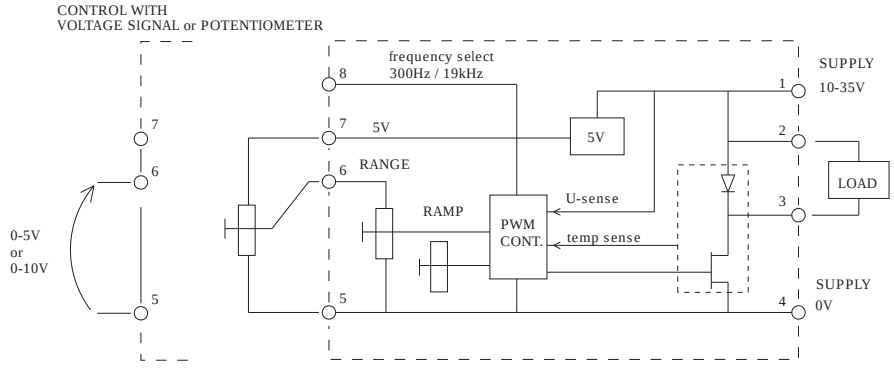

TECHNICAL DATA

Supply voltage	10-35V
Motor current	cont. max 10A (Ta<50°C) peak max 15A (10s)
Voltage drop	0.4V at 10A
PWM frequency	300Hz or 19kHz
Soft-start time	0..4s adjustable
Control range	0-5V or more, adjustable
Control input imp.	100kohm
Connectors	1.5mm
EMC	EN-50081-2 & EN-50082-2 (industrial)
Temp. protection	110°C
Weight	70g
Operating temp (Ta)	-20...70°C

EM-213 OPERATING INSTRUCTIONS

Supply should be filtered 10-35Vdc,
max. ripple <30% on full load.
ATT. Wrong supply polarity can damage the controller.
ATT. Driver has no fuse in it.

Choose the operating frequency with pin8,
0V..1V or open for 19 kHz , 2..5V for 300 Hz.

Choose the range

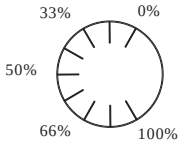

Choose the ramp time / s.

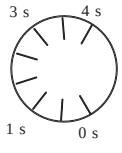

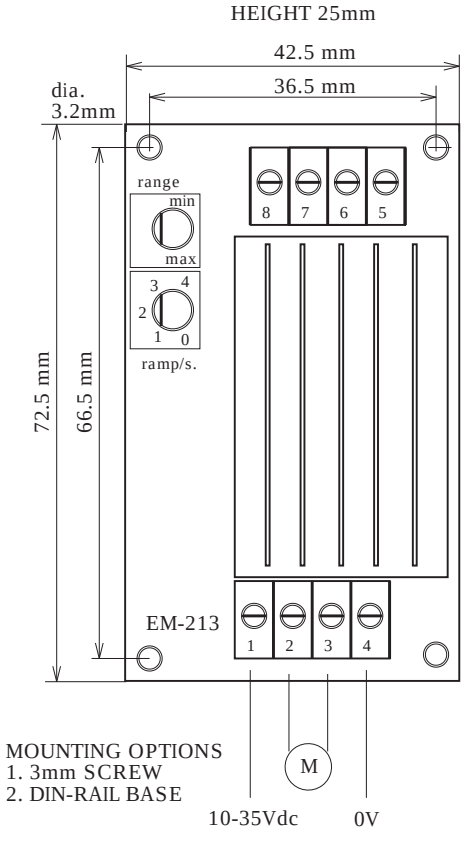

EXAMPLE 1 - MOTOR CONTROLLER

Speed is set with with external voltage signal to pin 6. Control range is set with range trim. Motor ramp is set with ramp trim. Pin8 is left open for 19 kHz operation frequency. Auxiliary 5V from pin7.

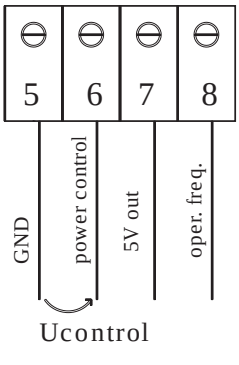

EXAMPLE 2 - LAMP DIMMER

Lamp brightness is set with with internal range trim.
Illumination ramp is set with ramp trim. Pin8 is connected to 5V for 300 Hz operation frequency.
Auxiliary 5V from pin7.

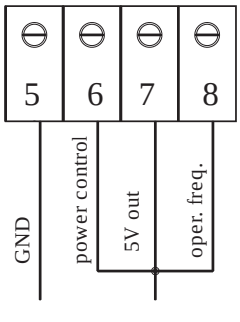

ELECTROMEN Oy Vähäheikkiläntie 56B, 20810 Turku, FINLAND Tel. +358-2-4693050 Fax. +358-2-4693052

EM-217B (-H) INVERTER FOR 230VAC 1-ph INDUCTION MOTORS

FEATURES

-speed control
-direction change
-start ramp
-slip compensation
-isolated control
-V/mA control signal
-EM-217B open card
-EM-217B-H (housed)
-low disturbances

EM-217B is a frequency inverter for speed control of small 1ph induction motors. This device creates two output voltages with 90 deg. phase difference to each other, so theres no need for auxiliary capasitor like often with 1ph motors. The frequency output range is from 15Hz up to 80Hz. The output stage works with PAM princible and that way the EMC emissions are very low. The control can be done with voltage or mA signal or with potentiometer. The rotation direction can be changed with digital command. All cotntrol inputs are galvanically isolated from mains supply. Device has also a start and stop ramp for smooth operation. If needed, the stop ramp can be disabled for quicker stop. The EM-217B has self recovery mains fuse that offers a good immunity against the mains voltage spikes

TECHNICAL DATA

Supply voltage 200-240Vac 50/60Hz
Current consumption max. 200mA
Motor recom. up to 15W
Isolation 1500Vrms
Aux. voltage output 5V max. 5mA
Control signals 0-5V, 0-10V tai 4-20mA
Potentimeter recom. 1-47kohm
Input impedance 100kohm / 150ohm
Dir. input level 4-30V =0N / <1V =OFF
Dir input impedance 100k
Start ramp 1s (0 to 100%)
Stop ramp 1s. or 0s.
Direction change delay 0.2s
Connectors 1.5mm
Operation temp. 0-60℃
Power loss max. 5W
weight 80g (100g with box)
Dimensions card 67x86x30
Dim. with box 72x90x60
EMC tested for household / light industry

BLOCK DIAGRAM EM-217B

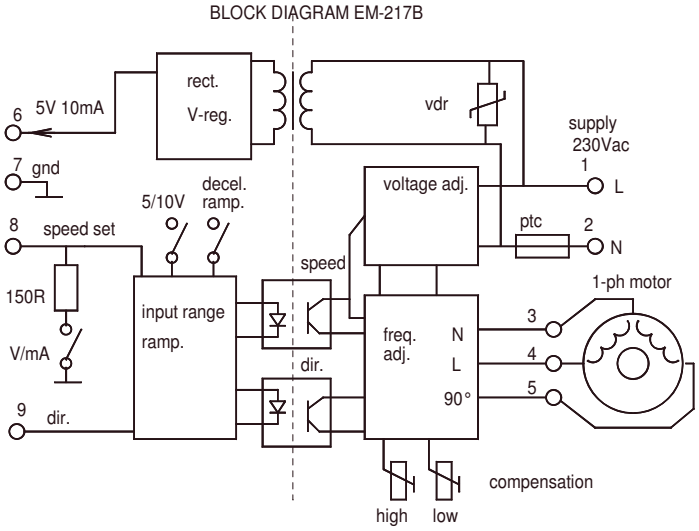

ELECTROMEN Oy www.electromen.com

22.09.10 bbroe

INSTALLATION

-Supply voltage 200-240Vac 50/60Hz
-Supply must be switched off when connecting
-Settings of switches:
  input range: V / mA / Potentimeter
  stop ramp on / off
-Turn compensation trims to recommended position
 (if motor is unknown, set both trims to min. position)

NOTICE !

- Installation of this device is allowed only for person who has competence for mains voltage voltage installation like a licensed electrician.
- The slip compensation adjustments are on mains voltage side. So use allways insulated tools.

INTRODUCTION

Turn supply on and start to increase speed set voltage. Motor should start to run smoothly from low speed to high speed.

Try to change direction when motor is running at high speed. Motor should slow down and start to the other direction. If a fast direction change is desired, change the "stop ramp" link to off position.

Adjustment of the compensation:
Turn "high" trim to middle position and "low" trim to minimum position. Set the motor to run at low speed and adjust "low" trim slowly towards max. until motor speed starts to rise. Then load the motor gradually and you should notice the driver increasing the motor speed. The compensation increase on higher speeds can now be adjusted with the "high" trim.

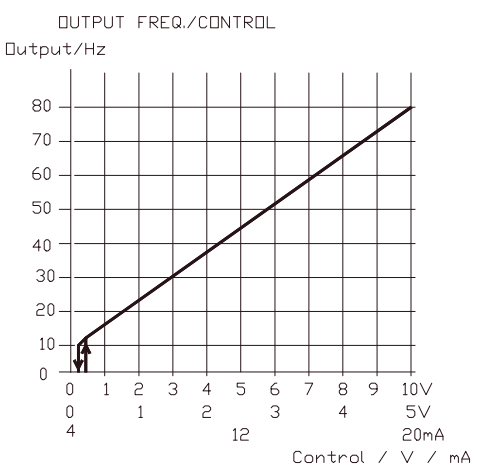

Example:
rotation speed range calculation
4-pol. motor 1500rpm/50Hz
given slip on nominal load 300rpm

max. (80Hz*60s)/2=2400rpm-300rpm= 2100rpm
min. (15Hz*60s)/2=450rpm-300rpm= 150rpm

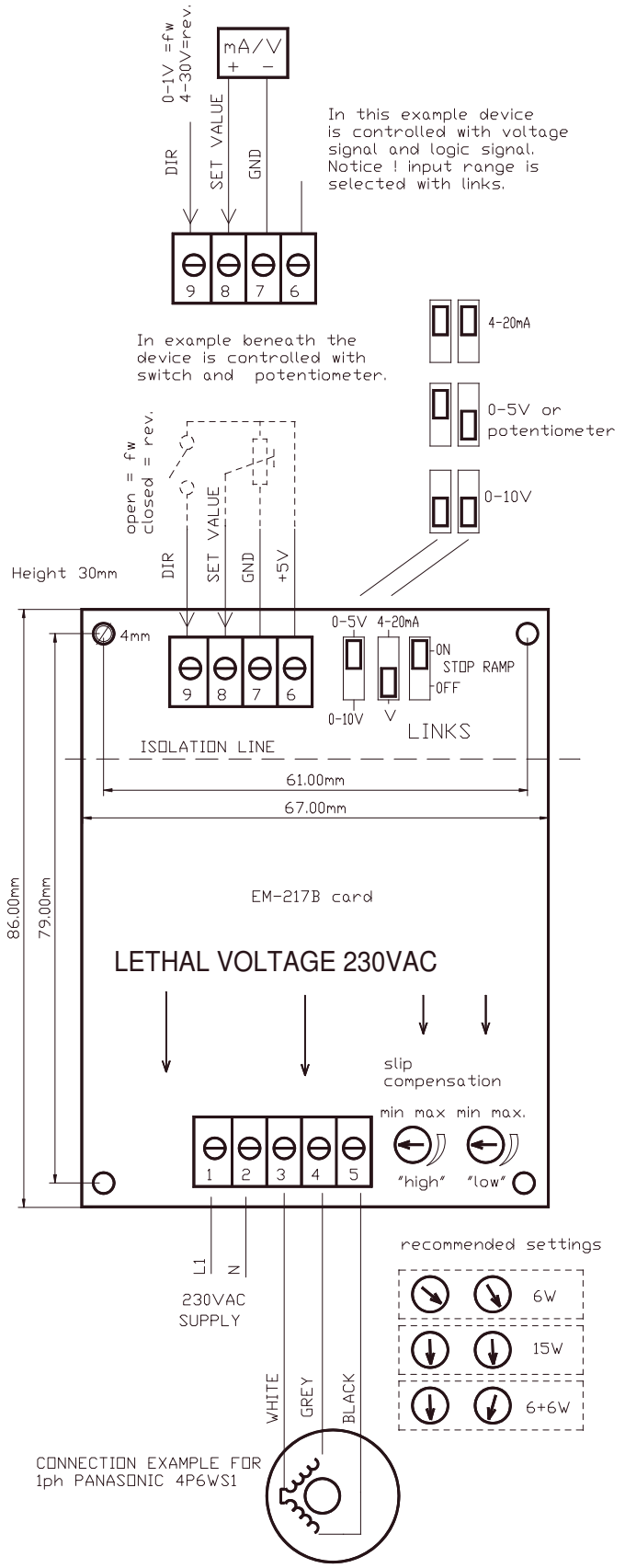

22.09.10 bbroe

EM-231A CONTROL UNIT FOR DOORS AND HATCHES

FEATURES:

- supply from 230Vac
- for 24Vdc motors
- motor current limit
- safety reverse
- end switch inputs
- pulse encoder input
- radar input
- remote control option
- CE marked

EM-231A is designed for door and hatch controlling. Control unit includes the 230Vac isolated mains power which converts the voltage to the 24Vdc for control electronics and door motor. Motor can be a normal low voltage DC-motor. In the basic operating mode the end stop can be realized with current limit or end switches. More sophisticated behaviour can be achieved with pulse encoder feedback. In this pulse mode the controller can be learned with a push of a button. After the controller has learned the stroke length it executes the open/close cycles smoothly anticipating the end stops with slow down ramps. In all operating modes the current limit is active and ready to stop the motor if the adjusted value is exceeded. If desired a safety reverse action can be set to follow this current trip. With safety reverse active eg. a person who is in the way of a closing door will cause the motor to reverse and door to open. Unit includes the inputs for end switches, door radar, OPEN/CLOSE buttons and for pulse encoder. Additionally there are inputs also for emergency drive and learning, and a serial connector for an interface unit. An optional remote control feature can be achieved with a remote control unit and by plugging a receiver hybrid (EM-A6) in to its holder. Speed, ramp times and current limit can be adjusted with trimmers. Operating mode, safety reverse and learning can be enabled and determined with dip switches. To achieve more sophisticated operation and customized settings the serial interface unit EM-236 can be connected to serial connector. With serial interface user can adjust the approaching speed, acceleration zone length, approaching current limit and radar off delay.
EM-231A is housed to a plastic IP30 (IP65) ABS(PC) housing. Unit is CE-marked.

TECHNICAL DATA

Supply voltage	230Vac / max. 100W
Fuse	T1A 20x5mm
Output voltage	nom. 24Vdc
Output current	1.5A (Uout=24V)
	3A (Uout=18V) 30% duty
Current limit	0-4A
Ramp time	0-2s
Speed range	0-100%
Pulse frequency	max. 1000Hz/50/50%
Pulse length	min. 0,5ms
Input signals	4-30V=ON / 0-1V=OFF
Input impedances	10kohm
Aux. outputs	Total current 50mA
	24V max.40mA
	5V max. 40mA
Fault output	NPN open col. (100mA)
Remote Control	433Mhz typ. range 10m
Housing ABS(PC)	130x130x60 / IP30 (IP65)
Operating temp.	0-50°C
Mains isolation	1000V

EM-231A BLOCK DIAGRAM

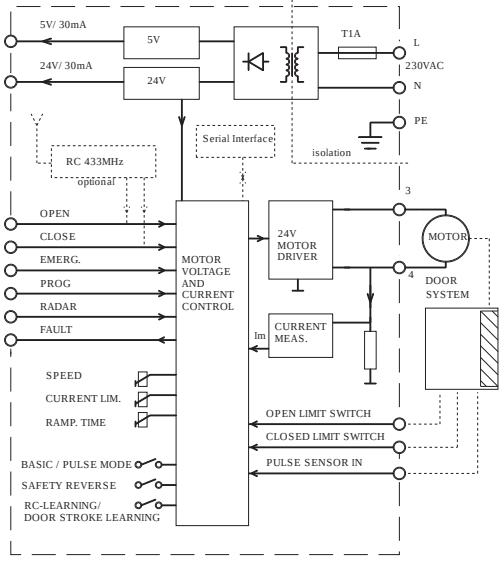

DIP-switch settings

1. basic mode = OFF / pulse mode = ON
2. safety reverse active, ON / OFF
3. RC-learning = OFF / door stroke learning = ON

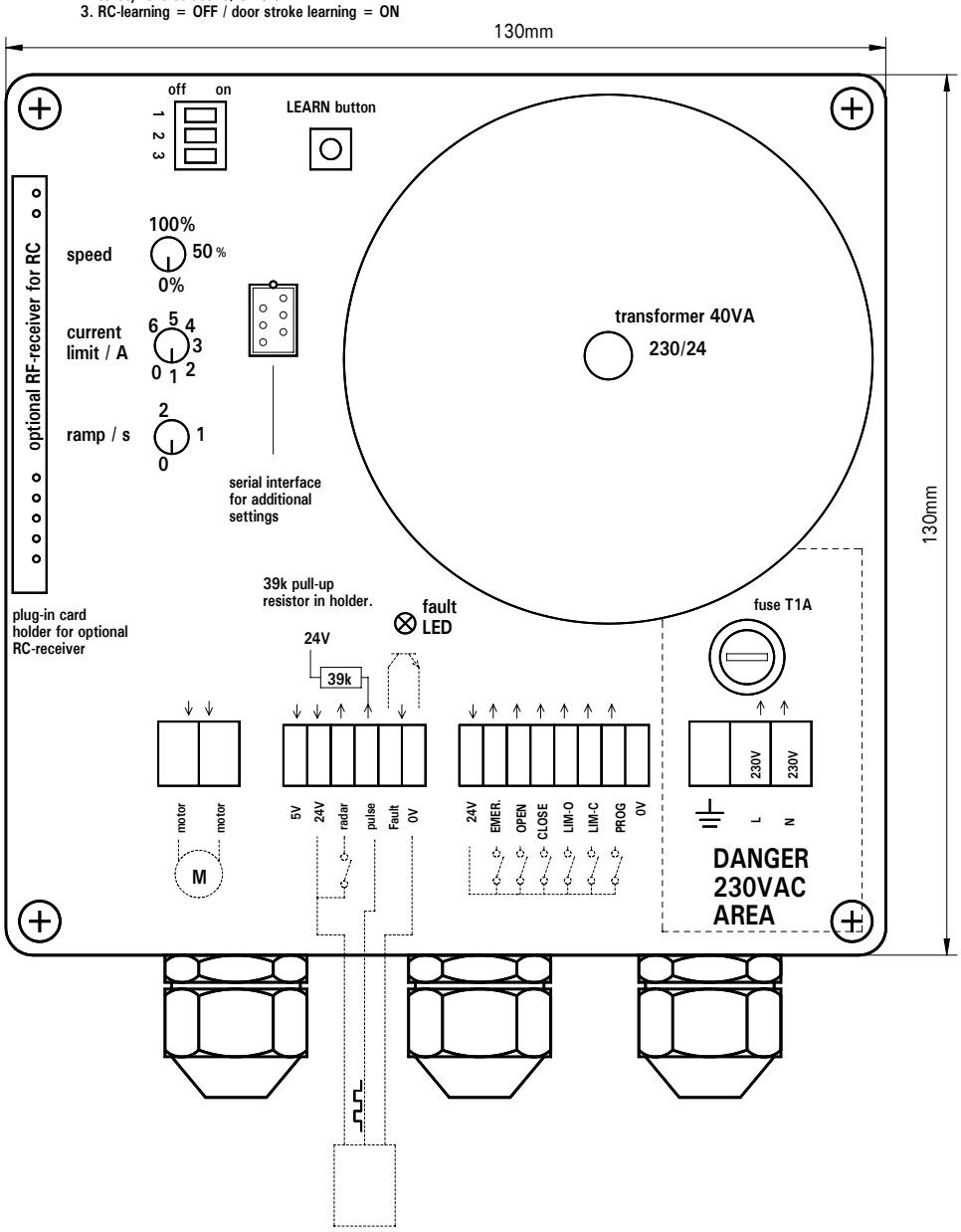

CONNECTIONS
Make sure that the mains supply is not on when making the connections. NOTICE! that there is 230Vac area in this device. Do not let any other than 230Vac wiring in this area. Do not use the same inlet for others than 230Vac cabling. Device has a terminal for connecting the protective earth (PE). It can be used if there is need for leading the PE to the auxiliary devices.
Check that the current consumption of limit switches, pulse encoders and radar do not exceed the max. current feed capability of 24/5V auxiliary outputs (altogether 50mA). Control inputs operate with positive 4-30Vdc signals, with input impedance of 10kohm. The pulse encoder input can be configured for PNP or NPN signal, that is with up or down pullin transducers. Eg. Hall-transducers are mostly of the NPN-type (pull down), in that case the 39kohm line pull up resistor should be in its holder.

SETTINGS
Set the desired operating mode with dip-switch (see the page OPERATING MODES). Adjust the speed, ramp time and current limit with trimmers. If you need more detailed setting, attache the EM-236 serial interface to this control unit, and you have access to a lot wider range of parameters (see the page 3 OPERATING MODES). Especially in pulse mode can be achieved better adjustability with EM-236.
The safety reverse can be enabled with dip switch 2. When safety reverse is enabled, the motor will automatically reverse after exceeding the adjusted current limit eg. in case of encountering an obstacle during close run.

LEARNING
In pulse mode the control device must be learned for the right driving cycle of a door or hatch. This is done by switching the dip-switch 3 to ON-position and pressing the learn button. After this the device will execute the learning cycle (see page 3 OPERATING MODES). After this the functionality can be adjusted with parameters. NOTICE. Learning can be triggered also with a 4-30V signal to the prog. terminal.

RC-learning (if the optional RC receiver EM-A6 is attached)
To be able to remotely control the device it has to be learned the code of the specific remote control unit. Set the dip-switch 3 to OFF position, keep the learn button pressed and press the remote controllers OPEN button so long that the door is started (about 1s). Afterwards return the dip switch 3 to ON position. Also in this case the prog. input can be used instead of the learn button. NOTICE. Remote control will not work at the same time as the interface unit is connected to the control unit.

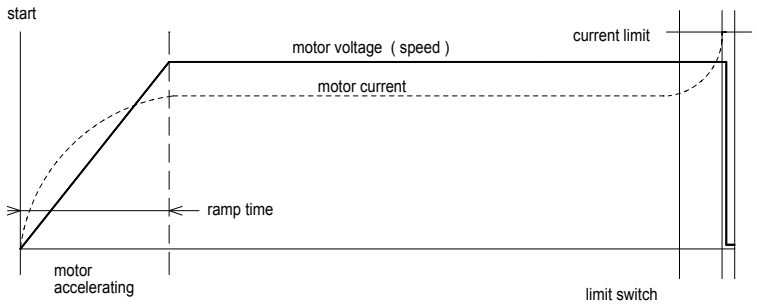

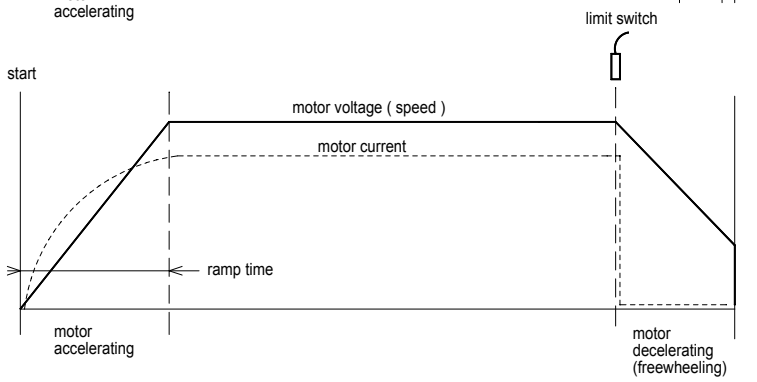

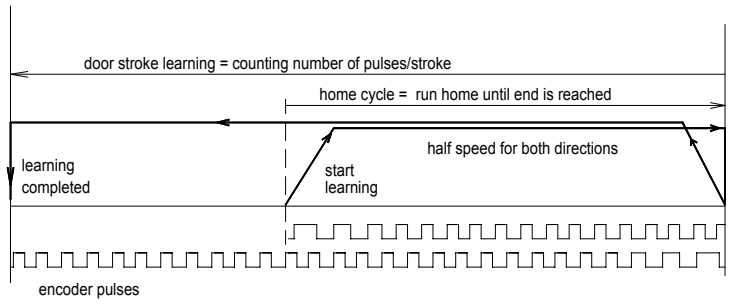

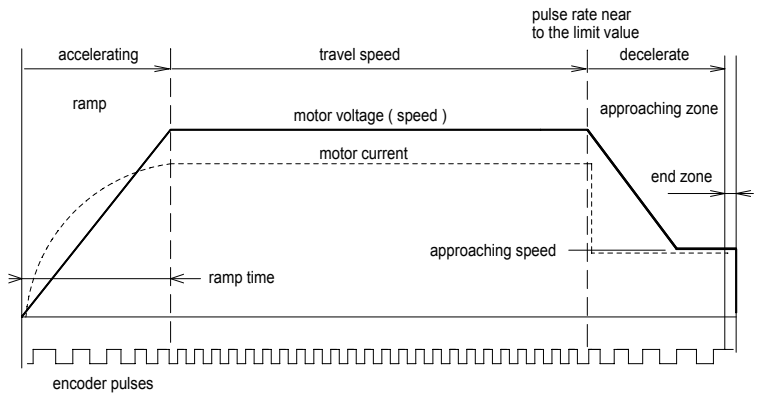

OPERATING MODES OF EM-231A

BASIC MODE with current trip

-open/close command starts motor
-motor accelerates with ramp
-motor runs with adjusted speed
-door meets the end point and motor current starts to rise until it exceeds the current limit, which causes the motor shut down
-the current limit also shuts down the motor, if the door meets an obstacle during drive cycle
-the action is same to both directions
-the safety reverse function is not available in this mode
-Notice ! In this mode there should be some kind of bumper in the end of stroke to smoothen up the end stop.

BASIC MODE with a limit switch

-open / close command starts motor
-motor accelerates with ramp
-motor runs with adjusted speed
-door reaches the limit switch and motor will be shut down.
-door slides with decelerating speed to the end of stroke.
-If door meets an obstacle inside stroke, the current limit will shut down the motor.
-If safety reverse function is activated, and current limit is exceeded during close cycle, the door will stop and then start automatically to open direction.

PULSE MODE

In this mode the device uses pulse counting to control the stroke lenght of the door.
Recommended pulse rate is 200-10000 pulses/stroke, and pulse frequency should be below 1000Hz

When system is taken in use for the first time, run the " learning" routine first:

- push learning button
- motor starts to run at approaching speed until the door reaches the end of stroke.
- Then motor starts automatically to opposite direction. During this calibration cycle the device counts the number of pulses of the full stroke and in the end of this cycle the motor stops and the number of pulses is stored to memory.

After learning has been done the system is ready to run

- open/close command starts the motor
- motor accelerates with "ramp"
- motor runs at "travel speed"
- door reaches the edge of "approaching zone", motor speed is changed to "approaching speed" and current limit to "appr. current lim."
- motor is stopped if:
  - current limit is exceed
  - pulses stop coming
- if motor stops inside the "end zone ", the device will reset the pulse counter and is ready for re-start
- but if shut down happens before counter has reached the "end zone" value, the device will go to "limb mode" and next cycle will be driven with approaching speed.
- If "safety reverse" setting is actived and the door meets an obstacle during closing cycle, the door will stop and reverse (open) automatically.

SETTINGS & PARAMETERS

Trimmer setting ranges

"ramp" 0-2s
"travel speed" 0-100%
"current limit" 0-6A

Automatically set parameters

"approaching speed" 50% of travel speed
"approaching current limit" = current limit
"approaching zone" 10% of full range
"end zone" 2% of full stroke
radar input make off delay 5s.

Dip switch settings

1. Basic mode = off / Pulse mode = on
2. safety reverse active on / off
3. RC-learning = off / door stroke learning = on

ADDITIONAL SETTINGS VIA SERIAL INTERFACE

The next settings are possible to set individually if serial interface unit is connected to device. If serial interface is selected to be active (param.1) the interface unit will over write trimmer- and automatic settings. With interface unit it is also possible to monitor the current and pulse counter values during drive.

	default settings
1. serial interface active 0=no / 1=yes	0
2. "travel speed" 0-100% (0-100)	100
3. "approaching speed 0-100% (0-100)	50
4. "current limit" 0-6A (0-60) 0.1A/step	30
5. "approaching current lim." 0-6A (0-60) 0.1A/step	30
6. "approaching zone" 3-30% of full stroke (3-30)	10
7. "end zone" 1-5% of full stroke (1-5)	2
8. radar input off delay 0-255s. (0-255)	5
9. "ramp" 0-2s (0-20) 0.1s/step	10

MONITOR VALUES

1. motor current 0-60 (0-6A)
2. pulse counter value 0-65535

EM-239 PARALLEL DRIVER FOR TWO ACTUATORS or MOTORS 12/24Vdc 2x10A or 2x20Apeak

FEATURES (program version 1.4 or later)

- **synchronized parallel driving**
- **operates with pulse feedback**
- **input for negative or positive pulses**
- **current and temperature limit**
- **settable drive speed**
- **acceleration and deceleration ramps**
- **different control modes**
- **wide range of parameters**
- **easy setting with serial interface**
- **good repeatability of settings**
- **autobalance feature**
- **one or double pulse mode**
- **safety reverse function (only prog. v2.4)**

EM-239 is designed for driving two actuators in parallel. The drive is done as synchronized according actuators pulse feedback signal. The synchronization is achieved by adjusting actuator speed during drive. If the adjustment can not compensate the unbalance between actuators, the motors will be stopped. This way the mechanical stress and breakage can be avoided. Additively the driver includes current limit and power stage temperature limit.
Driver works with actuators that can offer pulse feedback signal. Pulses can be derived from Hall-sensors, reed or other kind of switches. Driver can be set to read negative or positive pulses and also there can be selected two or one pulse line/motor mode.
Driver power stage operates with PWM (pulse width modulation), that enables the high efficiency and low losses of power stage.
The basic control is done with FORWARD-, BACKWARD- and STOP-commands. FORWARD and BACKWARD can be done in continuous or in impulse control mode. In continuous mode the drive is done as long the command is on. In impulse mode the command impulses start and stop the driving. For help in assembly and in other special situations, driver has TRIM-inputs for controlling both actuators individually. With these control inputs the user can override most of the limits of normal use and balance the actuators or restore the normal driving position after some unexpected occurrences like equipment failure or user in danger situation. HOME-command input is for driving the system in to its initial position. This driving is done with low speed and in to the end (in to the initial position). The counters are reset to zero. Wide range of parameters can be set to suit to different demands and different applications. In most cases the driver is ready to work with default parameters but some special features and behaviour can be accomplished with further parameter setting.
One new feature is SAFETY REVERSE function, which automatically reversing when motors meet obstacle and will be overloaded
The parameters are set with a handy interface unit EM-236. There is also possibility to use EmenTool Lite PC-sofware with EM-268 and EmenTool App with smartphones for parameter setting.

TECHNICAL DATA

Supply voltage 12- 35Vdc
Quiescent current 15mA
Motor output currents
2 x 10A cont. or 2 x 20A (at 25% duty)
PWM frequency 2kHz
Current limit 1-25A
Temp. limit 120℃ (pow.stage)
Ramp times 0 - 2s
Pulse input freq. max. 1kHz/ input ch
Pulse inputs pull- up/down 10kohm.
Control inputs 0-1V = OFF / 4-30V = ON
Input impedances 10kohm.
Fault-output active, pull down max. 50mA
Aux. voltage output 5V, max. 20mA
Measures 78 x 73 x 25mm
Operating temp. range -20 to 60℃
Weight of card 110g
CE Electromagnetic compatibility
EN-55022B and EN 61000-6-2/ -4-2...6

EM-239 BLOCK DIAGRAM (PCB. v.6)

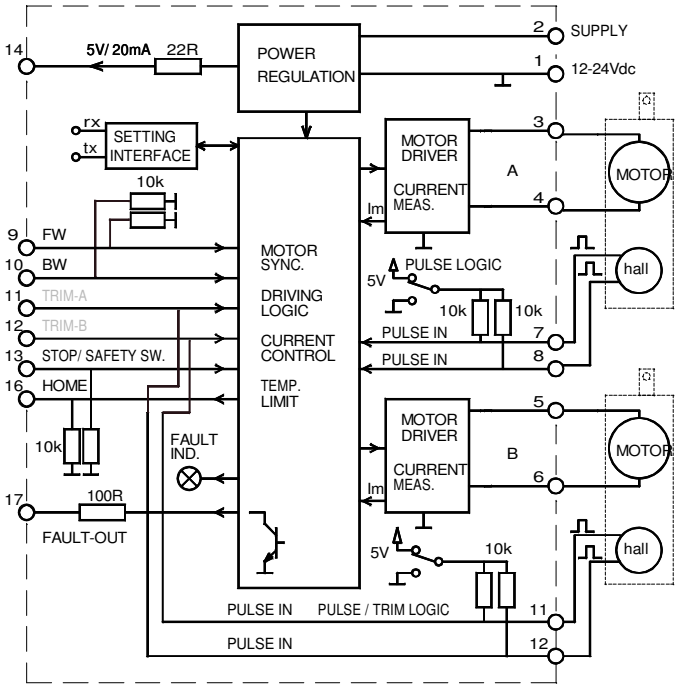

EM-239 INSTRUCTION GUIDE
prog. version 2.4, pcb ver.6

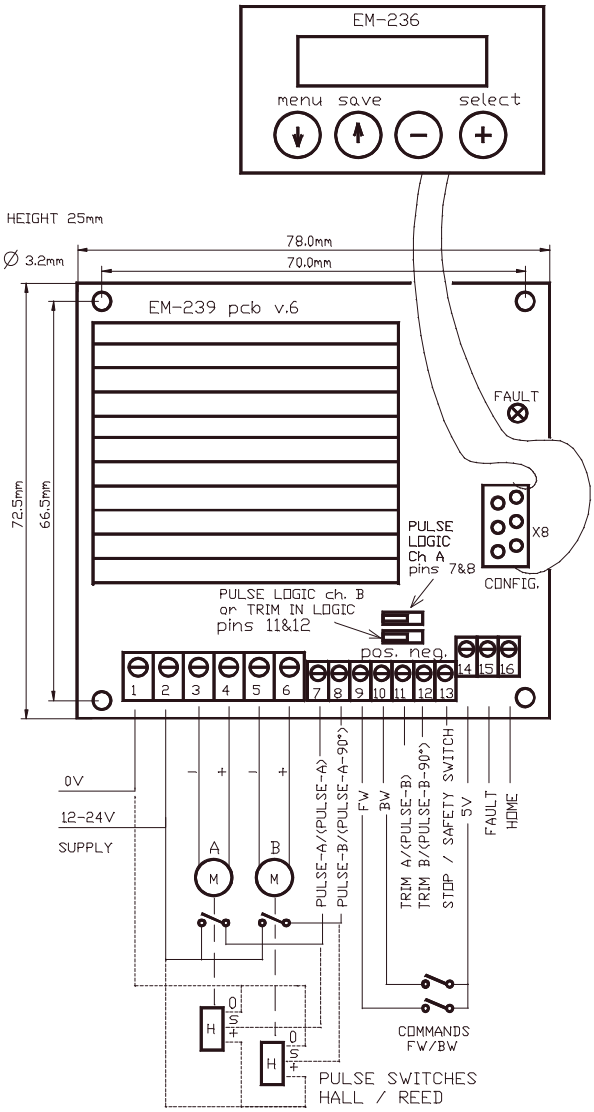

INPUTS / OUTPUTS

PULSE A and B inputs are for incoming feedback pulselines. Parameter 13 enables also the use of two pulselines/motor. If chosen the input pin order is changed and TRIM-inputs are disabled. In board v.6 the input logic can be selected for all pulse inputs with pulse and trim in logic jumpers. pos.= PNP, neg.= NPN

FW & BW are command inputs forward / backward.

STOP input is for the use of external stop command (eg. end switches). Stop input trigs also safety reverse function, so this input can be used as SAFETY SWITCH input.

HOME input is for starting the "drive home" routine

TRIM inputs enable driving of only one motor for setting the balance of the system or an emergency over-riding of motors, one or both. Trim inputs are changed to Pulse B and pulse B-90° input, if double pulse mode is chosen (param.13).
In bord v.6 also the trim input logic can be changed with jumper to be positive= PNP or negative = NPN.

FAULT output is activated in the following situations:
- -difference limit exceeded
- -pulses have disappeared
- -too high temperature
- -current limit exceeded (if enabled)

Notice! fault output is pulled down on alarm.

Inputs, 4-30Vdc (as HIGH) signal levels
0-1V, (as LOW)

Output, NPN open collector max. 50mA

CONNECTION

Connect motors and supply as in picture. Supply voltage 12-35Vdc must be filtered, ripple less than 20% .
Pulse inputs can work with positive (PNP) or negative (NPN) pulses.
Selection is made with PULSE LOGIC selection switch.
Other inputs work only with positive commands.
NOTE. also TRIM-inputs work only with positive signal also in feedback use.

ADJUSTMENT AND SETTINGS (prog ver. EM-239 v2.4)

Settings can be done with three interface device options.
1. EM-236 interface unit
2. EM-268 interface unit with EmenTool Lite PC-software
3. EM-326 interface unit with EmenTool App smartphone application
   When using App you can set device-specific access code, which protects device against unauthorized smartphone connections. The access code can be reset with simultaneous FW and BW comand, when power switch on.

parameter list with : quality (set range) -default

1 Running speed 40-100% (40-100) -100%
2 Home speed 20-60% (20-60) -60%
3 Start ramp 0-2s (0-20) -0,5s
4 Stop ramp 0-2s (0-20) -0s
5 Current limit 1-25A (10-250) -5A
6 Difference limit 3-50pulses (3-50) -10
7 Behaviour smo.-> aggr. (1-10) -5
8 I-trip indication disabled =0 enabled=1 -0
9 Start condition 0-3 -1
  0= starts both direction after I-trip or stop comm.
  1= starts only for opposite direction. after I-trip,
  2= starts only for opps. dir. after stop command.
  3= starts only for opps. dir. after I-trip or stop comm.
10 Control Mode 1-4 -1
  1=continuous (runs as long as command is active)
  2=impulse (short command starts run)
  3=impulse-2 (as par-2, but dir. change without stop)
  4=continuous + continuous home command
11 Safety reverse time 0-30 (0 or 0.1-3.0s) -0
  0= safety reverse disabled, 1-30= reverse time
12 Auto bal. trigger 0-255 / (0-255) 0=not in use -0
13 Double pulse mode 0=disable / 1= enabled -0
14 End limit FW 0-65535 / (0-65535) 0=disabled -0

PARAMETER DESCRIPTION

"Running speed" is the speed which is used in normal mode.

"Home speed" is the low speed used during home-routine.

"Start and stop ramps" define the acceleration and deceleration time to 0-100%-0 speed.

"Current limit" is limit value for current trip.
If current limit value is exceeded the motors will be stopped. During the period of start ramp + 1s the current limit is 1.5 times the current limit set value.

"Difference limit" is the value for largest allowable difference between A and B pulse counters. If this value is exceeded motors will be stopped.

"Adjust behaviour" defines how fast and intensively the driver will adjust the syncronisation between motors A and B. Smooth 1 --> Aggressive 10

"I-trip-indication"
FAULT output can be set to go ON also in current trip situation.

"Start condition" enables the device to re-start the motor to both or only to opposite direction after a trip or stop situation.

"Mode" sets the driver control mode.
In continuous mode the motor runs as long as command (fw or bw) is ON.
In impulse mode a short command starts the motor and the direction is changed with opposite command. Motor will stop only with stop command.
In impulse-2 mode motor starts with short (FW/BW) impulse. Following command stops the motor, and next command (FW/BW) starts the motor again. Of course in all modes the difference limit, current limit and STOP-command will stop the motors.

"Safety reverse" means automatic reverse run if device has stopped result of overload = I-trip. This function can be disabled or the reversing running time can be set with parameter.
Also stop input trigs safety reverse function

" autobalance trigger " parameter value sets the starting point for auto balancing. Value is the number of pulses counted from mechanical home. The autobalance runs at home-speed which can be set with parameter 2.

"double pulse mode" makes posible to use two pulse sensors for one motor and this way driver can always detect the right direction of the movement. This is recommended allways when double pulses are available. NOTICE. the TRIM function is not possible to use in double pulse mode. See example 4

"end limit fw" is a pulse counter "end stop" for FW direction. The position is determined in pulse edges from 1 to 32000. Value 0 means that end stop is not in use

EXAMPLE 1.
3-WIRE MOTOR WITH REED SWITCH
PULSE SENSOR, PULSE LOGIC
LINK SHOULD BE IN POS. POSITION

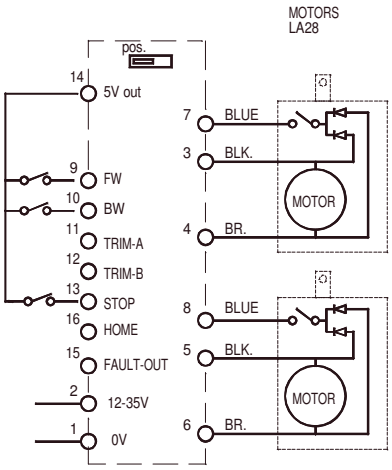

EXAMPLE 2.
4-WIRE MOTOR WITH REED-SWITCH
PULSE SENSOR, PULSE LOGIC
LINK SHOULD BE IN NEG. POSITION

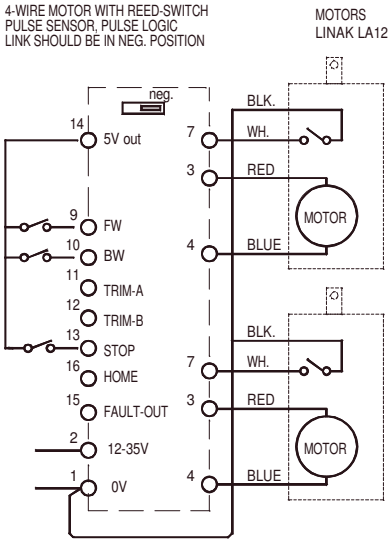

EXAMPLE 3.
MOTOR WITH HALL PULSE-SENSOR ,
PULSE LOGIC LINK SHOULD BE IN
POS. POSITION

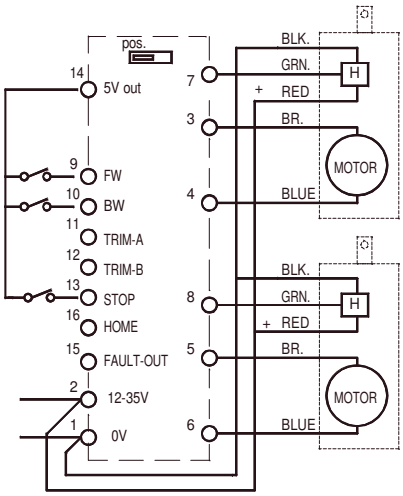

EXAMPLE 4.
MOTOR WITH HALL DOUBLE PULSE-SENSOR ,
PULSE LOGIC LINK SHOULD BE IN
POS. POSITION

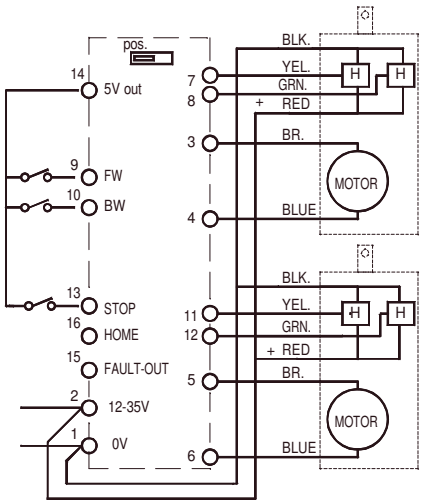

DRIVE HOME ROUTINE (balancing)

Drive home routine is a calibration cycle for balancing the system. Home routine can be started by giving FW and BW commands at the same time for 3s or with incoming signal to HOME input. If "power-on home" parameter is enabled the home routine is started every time when power comes on. Drive home routine can be interrupted with new FW or BW command or signal to STOP input. When drive home routine starts, both motors start to run to same direction and will run until current limit stops the motor or pulses stop coming. During the drive home routine the fault led is blinking slowly. When blinking stops and both motors have stopped the device has reset the pulse counters. Now device is ready for use. If there is need to change the home drive direction, swap the motor wires. In double feedback pulse mode the hall signal wires should be swapped too (A to A-90 and B to B-90).

AUTO BALANCE (soft ending to home position)

Auto balance starts balancing ruotine before "real" home. The trigger point is set with parameter 12 . If auto balance is active it balances the system automatically in the end of stroke. This will prevent the possible pulse error cumulation. Auto balance works always to the home direction and with "home-speed" speed (parameter 2). The auto balance can be used also as soft ending to home position, because the motors will decrease speed to "home-speed" before reach mechanical end.

FAULT situations:

motor is jammed (current trip), pulses disappear or, pulse counter difference is too high (difference limit). The driver will stop the motors and FAULT output will be pulled down (also in I-trip if indication is enabled). When motor is re-started the FAULT output is reset. Faults are also indicated with fault LED as followes:

1 slow blink = position corrupted
2 blinks = current trip,
3 blinks = pulses disappeared,
4 blinks= difference limit,
5 blink = over temperature.

TRIM and override

TRIM input allowes the balance trimming and emergency use. When one of TRIM inputs is activated only the corresponding motor will run. During trim-run the balance adjust and pulse counters are disabled. If both TRIM inputs A and B are activated, it is possible to override motors and only the current limit is active.

MONITORING.

During the normal use it is possible to monitor the function of driver with EM-236. Select the monitor mode in EM-236 and you can check the following values:
- 1 current, motor A 10-200 = 1-20A
- 2 current, motor B 10-200 = 1-20A
- 3 pulse count / run cycle (only motor A)
- 4 pulse count difference
- 5 position counter A 0-65535
- 6 position counter B 0-65535

FEEDBACK PULSES

Pulse inputs can work with positive or negative feedback pulses. When pulse logic switch is in negative position, the inputs are internally pulled to 5V with 10kohm resistor. When positive logic is chosen the inputs are pulled to 0V correspondingly.
The driver counts pulse edges so the counted value is double compared to the actual number of pulses.

EM-240 BRUSHLESS DC-MOTOR CONTROLLER 12-24V 1.5A

FEATURES:

- Hall sensor supply and input
- Open or closed loop activity
- Controlled direction change
- Braking
- Settable current limit
- Settable start and stop ramp
- Dip-switch settable
- EMC tested

EM-240 controller is designed for small brushless DC-motors. The unit is suitable for three phase hall transducer brushless motors. There are two operating modes: in open loop operating mode the motor voltage is proportional to control value with the characteristics of a common DC-motor with brushes. In closed loop operation hall transducer signal is used to regulate motor speed. Through the feedback, a precise motor rpm in relation to control value can be achieved.
The motor operating speed and running direction can be adjusted and the motor may be braked in both operating modes. The power stage uses PWM princible and is highly efficient.

Speed control value is given as analog voltage signal. The auxiliary voltage signal is regulated and may be used as reference value for control potentiometer. The acceleration speed can be adjusted with acceleration and deceleration ramp. Deceleration ramp can also be bypassed when rapid braking is desired. Additionally the unit is equipped with speed2-feature, which can be activated individually. This is especially practical in positioning applications.
Current limit can be used to restrict motor torque and is dip-switch settable. Control inputs work with positive (NPN) logic. EM-170 is EMC-tested in accordance with industrial standards.

TECHNICAL DATA:

Supply	12-35V
Current cons.	max 2A
Idle current	20mA
Output voltage	0-32V
Motor rpm	max. 18000 rpm
Output current	1.5A continuous 2A (10s)
Current limit	0.2, 0.3, 0.4, 0.5, 0.6 0.7, 0.8, 0.9, 1, 1.1, 1.2 1.3, 1.4, 1.5, 1,7 and 2A
Ramp time	0, 0.1, 0.2, 0.3, 0.5 0.7, 1.0, 1.5s
Input control voltage	0-10V (Rin 100kohm)
ON/OFF control	0-1V =”off” 4-30V=”on”
Input impedance	10kohm
Auxiliary voltage	10V (max. 5mA)
Operation freq.	16kHz
Operating temp.	0-60°C
EMC	EN-50081 and EN-50082-2
Measures	60x60x20mm
Weight	30g

EM-240 BLOCK DIAGRAM

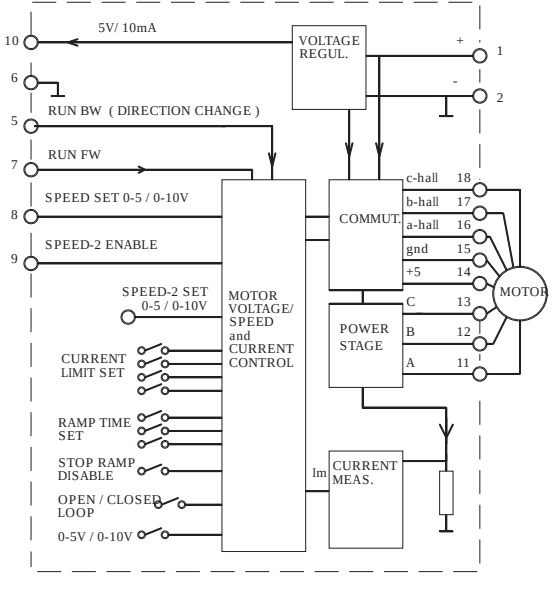

ELECTROMEN Oy Vähäheikkiläntie 56B, 20810 Turku, FINLAND Tel. +358-2-4693050 Fax. +358-2-4693052

rev.1 p.2

EM-240 OPERATING INSTRUCTIONS

Supply filtered 12-35VDC with
ripple < 20% with full loadd.
CAUTION ! reverse polarity can damage the unit
CAUTION ! no internal fuse

SETTINGS AND CONNECTING UNIT

Switch off power before connecting motor and power supply to EM-240. Prepare the control circuit. Set current limit and ramp time according to application.

In open loop mode motor rpm will drop when loaded (in relation to control voltage), whereas in closed loop mode the motor rpm will be constant (in relation to control voltage) unless the current limit is not exceeded. The control value relation to motor output voltage is illustrated in the chart below. Speed-2 control value is given via molex-connector, the scaling is same as in speed-1 input. If speed-2 feature is not required, this potentiometer can simply be left out. Recommended speed control potentiometer value is 2..50kohm for both speed-1 and speed-2.

Control inputs can be used with switches, analog voltage or NPN outputs of a logic. A voltage signal greater than 4V is logic 1, maximum input voltage 30V. Forward input will start up the motor in forward direction. Reverse input will start up the motor in reverse direction. When motor is already running forward, direction will change. Speed-2 will set the running speed according to input signal in molex connector. Notice: Speed-2 input will start up the motor in forward direction even if no other inputs are activated. Control voltage and speed set value are in reference with 0V gnd potential (pin6).

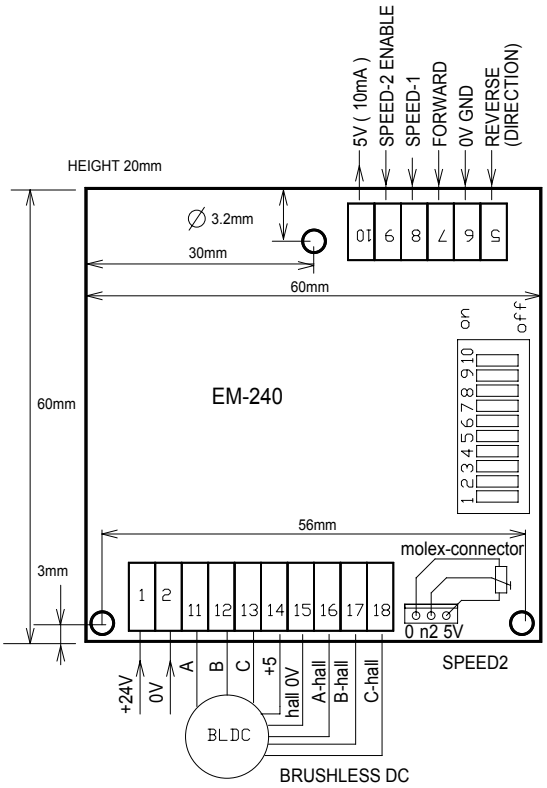

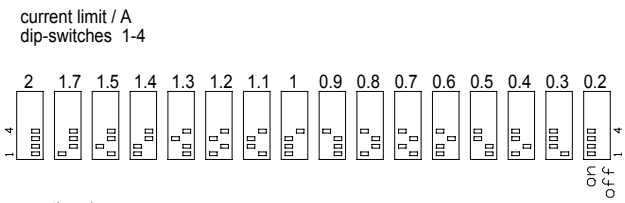

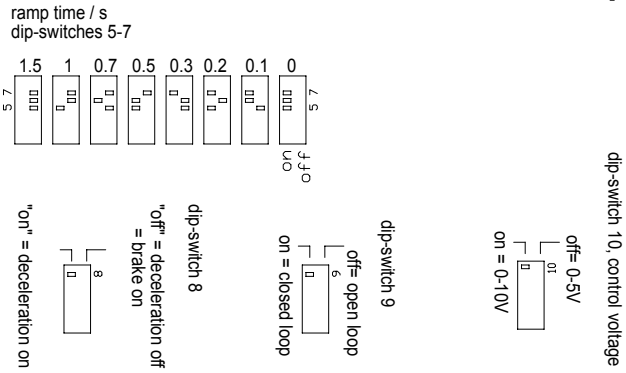

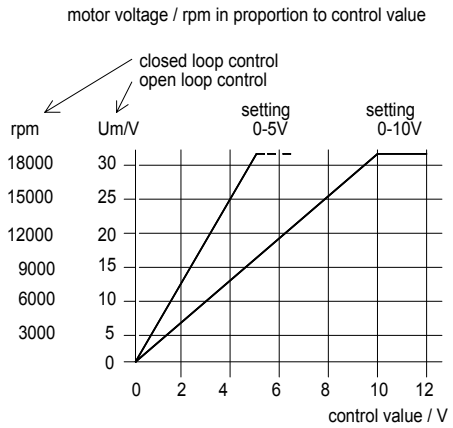

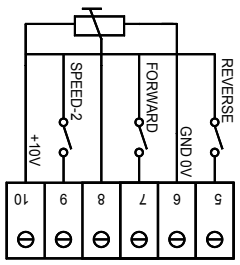

EXAMPLE 1

Speed control with potentiometer.
Speed-2 with external potentiometer.
Control input with switches.

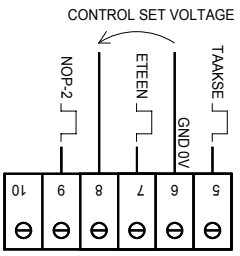

EXAMPLE 2

Speed control with voltage 0-5V or 0-10V.
Speed-2 with external potentiometer.
Control input with 4-30Vdc voltage.

EM-241A/B DC-MOTOR CONTROLLER 12-24V 15A

- small size
- high current output
- current limit
- zero current limit
- overvoltage brake
- speed setting
- flexible control inputs
- impulse / continuous mode
- rail base mountable
- dip switch only in PCB. version B
- A softwares compatible for B ver. PCB.
- digital parameter setting

EM-241 is a full bridge DC-motor starter. It is designed to work with DC-motor in applications where some special functions are needed. Starter has adjustable acceleration and deceleration ramps, which make possible the smooth starts and stops. Adjustable current limit protects motor against overcurrent and it can also be used as an end-stop. This device has also two settable speeds, which are usefull in positioning applications. Control inputs FW and BW start the forward and backward run. STOP is for the motor shut-down but there are also available individual limit inputs for FW and BW directions. SPEED-2 input activates preset speed-2, but it can also be used as input for analog speed control signal 0-5V. FAULT terminal has at the same time input and output function, the pin is normally high, but is pulled down in overheat and conditionally also in current trip situation. If FAULT-line is pulled down externally it will cause a stop and prevent the new start. For example, it is possible to link fault pins of several units together and achieve a syncronous stop.
There are two selectable control modes, continuous and impulse. In continuous mode the motor runs as long as the control is active. In impulse mode a short comand starts the motor, and only a new impulse will change the status. There is also few special settings start-kick and auto reverse. The card has selectable input logics. Inputs are divided in two groups, control and limit -inputs. Groups can be individually set for NPN or PNP logic. The parameters are set with EM-236 interface unit. Operation of the controller and some of its functional values can also be monitored with EM-236 interface unit.

TECHNICAL DATA (prog ver. 241A v1.5)

Supply voltage cont. max. 10-35V
Overvoltage limit adjustable 15-40V (connect motor to freewheel)
Overvoltage dynamic brake 40V (shorting motor poles)
Start up voltage 9V, shutdown voltage 8V
Motor current cont. max. 15A, peak max. 30A (Ta<50℃)
Current limit adjustable 0.1-20A (at start max 30A)
Overheat limit 100℃
Start and stop ramp adjustable 0-5s
PWM frequency 2kHz
Speed input scale (speed-2) 0-5V = 0-100% pwm
Input control logic: high =4-30V, low=0-1V
Control input impedances typ. 47kohm
Limit FW / BW input imped. typ 10kohm
Control input response time typ 5ms.
Fault out. NPN open coll. max 30V / 50mA
Fault in actives Uin < 1V (NPN)
Motor and supply connectors 2.5mm
Control connectors 1mm
Dimensions 42x72x25mm
Dimensions in DIN-rail base 45x80x45mm
CE-tested for industrial environment (emc)
Operating temp (Ta) -40...60℃
Weight 75g

EM-241B BLOCK DIAGRAM

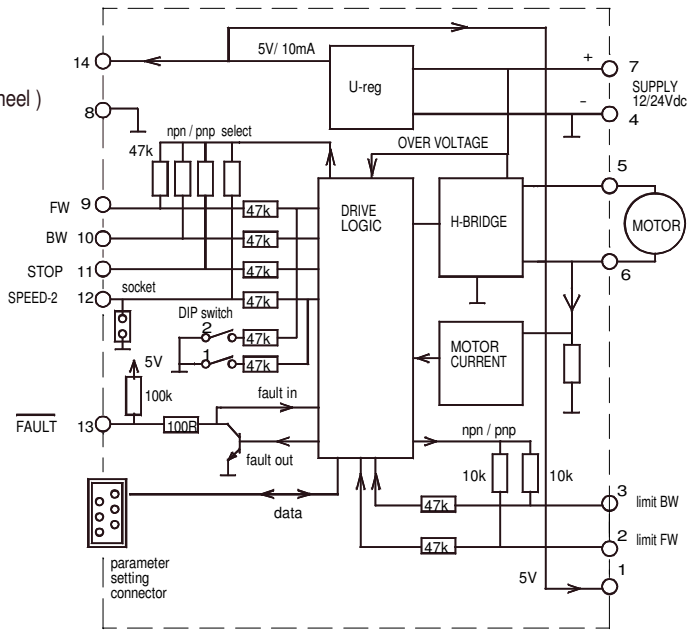

CONNECTIONS

Supply voltage must be filtered DC of 10-35V,
and ripple should be less than 30% at full load.
CAUTION ! Wrong polarity can damage the unit.
CAUTION ! Unit doesn't have an internal fuse, so
an external fuse should be added if fuse required.

MONITORABLE VALUES

1/5 Motor current 0-20A (0-200)
2/5 PWM-level-% 0-100% (0-100)
3/5 hour counter (max.65535h)
4/5 start counter (max.65535)
5/5 carry counter for start counter

FAULT-LED signal codes

1. power on	one blink
2. current on limit	led is lit
3. current trip	fast blinking...
4. zero-cur trip	long blink- short pause...
5. overvoltage	4 x blink -pause...
6. overheat	short blink- long pause...
7. timeout	3 x blink + long blink...
8. fault input	2 x short + 1x long blink...

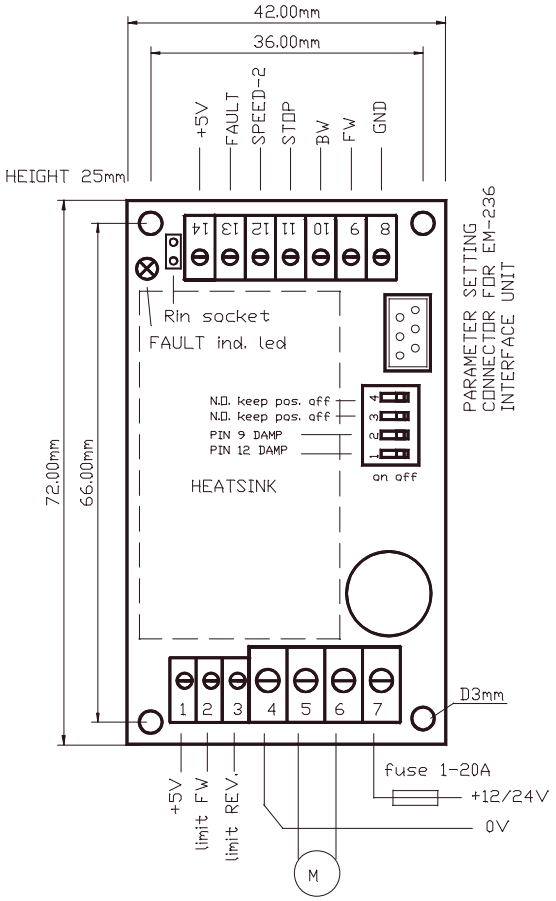

ADJUSTMENT AND SETTINGS (prog ver. EM-241A v.1.5)

Adjusting and parameter setting of eg.
current limit value, ramp times and speed-2
value is done with the EM-236 interface unit.
With EM-236 the parameters and adjusted
values can also be copied to multible
devices accurately and reliably.

SETTABLE PARAMETERS 18pcs. (defaults in brackets)

1- command mode: 0,1 and 2 (0)
  0= continuos FW / REV
  1= impulse commands FW / REV. with stop
  2=impulse commands FW / REV without stop
2- start condition combinations: 0-3 (1)
  0= start both direction after I-trip and Stop
  1= start only opposite direction after I-trip
  2= start only opposite direction after Stop
  3= start only opposite direction after I- and Stop
3- input logic combinations 0-3 PNP/NPN (0)
  0= command and limit inputs as PNP (positive)
  1= command inputs NPN, and limit inputs PNP
  2= command inputs PNP. and limit input NPN
  3= command and limit inputs NPN (negative)
4- running speed-1: 0-100% / 0-100 (100)
5- running speed-2: 0-100% / 0-100 (50)
  Note: If selected to 0 or 1 "speed2-input" is
  used as analog 0-5V speed control input, and
  when 1 is selected FW direction is automatically
  "on" and FWD input works as direction change
6- current limit FW: 0.1-20A / 1-200 (30)
7- current limit REV: 0.1-20A / 1-200 (30)
8- Trip combinations: 0-3 (1)
  0= no I-trip, no zero-current-trip
  1= only I-trip
  2= only zero-current-trip
  3= both I-trip and zero-current-trip
9- I-trip delay: 0-255ms / 0-255 (20)
10- Fault output combinations: 0-3 (1)
  0= I-trip and zero current won´t cause fault output signal
  1= only I-trip causes fault output signal
  2= only zero current causes fault output signal
  3= both I-trip and zero currenT causes fault output signal.

11- overvoltage limit: 15-40V / 15-40 (35)
  Overvoltage can be caused by load driving the motor or
  when braking the speed down but supply can not accept
  the current back from driver. Exceeding the limit will cause
  the power stage set to free-wheel state.
  With a direct battery supply the brake current is charging the
  battery and the voltage will not normally rice.
  There is also 40V fixed dynamic brake point = motor pole shorted
12- load compensation: 0-255 / 0-255 (0)
  Load compensation (RxI) improves low speed and start
  torgue, but too high compensation achieve unstable running.
  Run motor at low speed (30%) Increase compensation
  with small steps until motor start behaviour unstable,
  t hen decrease value about 10%
13- timeout: 0-255s. / 0-255 (0=not in use) (0)
14- Reset for start and hour-counter 0/1 (0)
  selecting 1 and push SAVE => reset counters
15- start ramp: 0-5s / 0-500 (100)
16- stop ramp: 0-5s / 0-500 (100)
17- start-kick 0-200ms / 0-200 (0)
  This gives full drive at start and I-lim is 30A
  The start kick length is 0-200ms.
18- I-trip auto reversing 0-5s / 0-500 (0)
  Change automatically run direction when I-trip occurs
  the revesing time will select with this parameter

EM-241B-16k DC-MOTOR CONTROLLER 12-24V 10A

FEATURES

- 16kHz pwm frequency
- quiet run
- current limit
- zero current limit
- overvoltage brake
- freewheel options
- speed setting
- flexible control inputs
- impulse / continuous mode
- rail base mountable
- digital parameter setting
- Compatible with earlier version

EM-241B is a full bridge DC-motor starter. It is designed to work with DC-motor in applications where some special functions are needed. Starter has adjustable acceleration and deceleration ramps, which make possible the smooth starts and stops. Adjustable current limit protects motor against overcurrent and it can also be used as an end-stop. This device has also two settable speeds, which are usefull in positioning applications. Control inputs FW and BW start the forward and backward run. STOP is for the motor shut-down but there are also available individual limit inputs for FW and BW directions. SPEED-2 input activates preset speed-2, but it can also be used as input for analog speed control signal 0-5V. FAULT terminal has at the same time input and output function, the pin is normally high, but is pulled down in overheat and conditionally also in current trip situation. If FAULT-line is pulled down externally it will cause a stop and prevent the new start. For example, it is possible to link fault pins of several units together and achieve a syncronous stop.
There are two selectable control modes, continuous and impulse. In continuous mode the motor runs as long as the control is active. In impulse mode a short comand starts the motor, and only a new impulse will change the status. There is also few special settings start-kick and auto reverse. The card has selectable input logics. Inputs are divided in two groups, control and limit -inputs. Groups can be individually set for NPN or PNP logic. The parameters are set with EM-236 interface unit. Operation of the controller and some of its functional values can also be monitored with EM-236 interface unit.

TECHNICAL DATA

Supply voltage cont. max. 10-35V
Overvoltage limit adjustable 15-40V
Start up voltage 9V, shutdown voltage 8V
Motor current cont. max. 10A at 100% pwm (Ta<50℃)
Motor current cont. max. 5A at 50% pwm (Ta<50℃)
Peak max 20A
Current limit adjustable 0.1-20A (at start max 30A)
Overheat limit 90℃
Start and stop ramp adjustable 0-5s
PWM frequency 16kHz
Speed input scale (speed-2) 0-5V = 0-100% pwm
Input control logic: high =4-30V, low=0-1V
Control input impedances typ. 47kohm
Limit FW / BW input imped. typ 10kohm
Control input response time typ 5ms.
Fault out. NPN open coll. max 30V / 50mA
Fault in actives Uin < 1V (NPN)
Motor and supply connectors 2.5mm
Control connectors 1mm
Dimensions 42x72x25mm
Dimensions in DIN-rail base 45x80x45mm
CE-tested for industrial environment (emc)
Operating temp (Ta) -40...60℃
Weight 75g

EM-241B BLOCK DIAGRAM

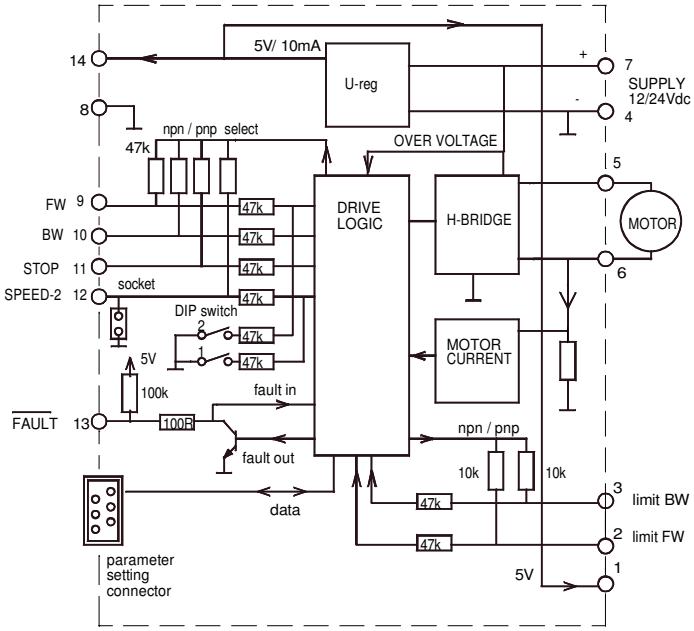

CONNECTIONS

Supply voltage must be filtered DC of 10-35V,
and ripple should be less than 30% at full load.
CAUTION ! Wrong polarity can damage the unit.
CAUTION ! Unit doesn't have an internal fuse, so
an external fuse should be added if fuse required.

MONITORABLE VALUES

1/5 Motor current 0-20A (0-200)
2/5 PWM-level-% 0-100% (0-100)
3/5 hour counter (max.65535h)
4/5 start counter (max.65535)
5/5 carry counter for start counter

FAULT-LED signal codes

1. power on	one blink
2. current on limit	led is lit
3. current trip	fast blinking...
4. zero-cur trip	long blink- short pause...
5. overvoltage	4 x blink -pause...
6. overheat	short blink- long pause...
7. timeout	3 x blink + long blink...
8. fault input	2 x short + 1x long blink...

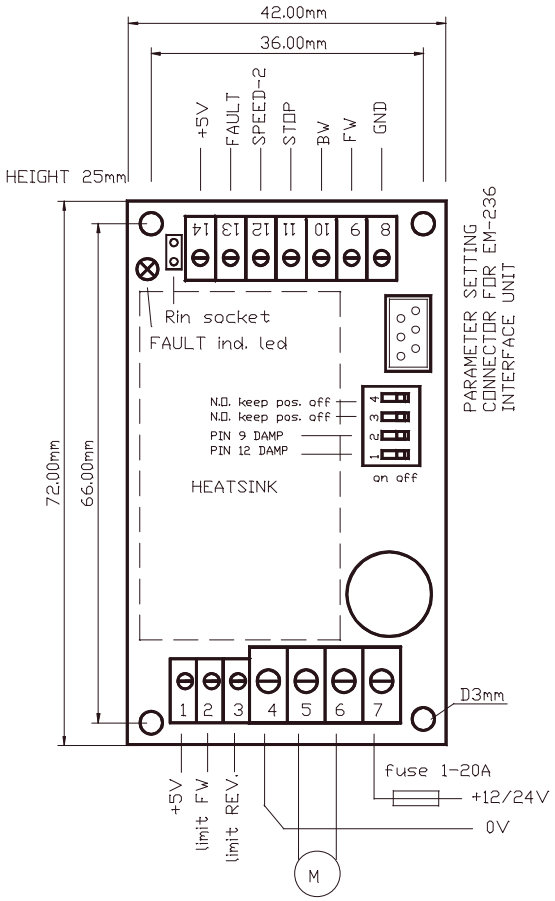

ADJUSTMENT AND SETTINGS

Adjusting and parameter setting of eg.
current limit value, ramp times and speed-2
value is done with the EM-236 interface unit.
With EM-236 the parameters and adjusted
values can also be copied to multible
devices accurately and reliably.

SETTABLE PARAMETERS for prog. 241B-16k v1.2
(defaults in brackets)

1- command mode: 0,1 and 2 (0)
  0= continuos FW / REV
  1= impulse commands FW / REV. with stop
  2=impulse commands FW / REV without stop
2- start condition combinations: 0-3 (1)
  0= start both direction after I-trip and Stop
  1= start only opposite direction after I-trip
  2= start only opposite direction after Stop
  3= start only opposite direction after I- and Stop
3- input logic combinations 0-3 PNP/NPN (0)
  0= command and limit inputs as PNP (positive)
  1= command inputs NPN, and limit inputs PNP
  2= command inputs PNP. and limit input NPN
  3= command and limit inputs NPN (negative)
4- running speed-1: 0-100% / 0-100 (100)
5- running speed-2: 0-100% / 0-100 (50)
  Note: If selected to 0 or 1 "speed2-input" is
  used as analog 0-5V speed control input, and
  when 1 is selected FW direction is automatically
  "on" and FWD input works as direction change
6- current limit FW: 0.1-20A / 1-200 (30)
7- current limit REV: 0.1-20A / 1-200 (30)
8- Trip combinations: 0-3 (1)
  0= no I-trip, no zero-current-trip
  1= only I-trip
  2= only zero-current-trip
  3= both I-trip and zero-current-trip
9- I-trip delay: 0-255ms / 0-255 (20)
10- Fault output combinations: 0-3 (1)
  0= I-trip and zero current won´t cause fault output signal
  1= only I-trip causes fault output signal
  2= only zero current causes fault output signal
  3= both I-trip and zero currenT causes fault output signal.
11- overvoltage limit: 15-40V / 15-40 (35)
  Overvoltage can be caused by load driving the motor or
  when braking the speed down but supply can not accept
  the current back from driver. Exceeding the limit will cause
  the power stage set to free-wheel state.
  With a direct battery supply the brake current is charging the
  battery and the voltage will not normally rice.
  There is also dynamic brake point which is 3V over this
  parameter value, then motor pole shorted
12- load compensation: 0-255 / 0-255 (0)
  Load compensation (RxI) improves low speed and start
  torgue, but too high compensation achieve unstable running.
  Run motor at low speed (30%) Increase compensation
  with small steps until motor start behaviour unstable,
  t hen decrease value about 10%
13- timeout: 0-255s. / 0-255 (0=not in use) (0)
14- Reset for start and hour-counter 0/1 (0)
  selecting 1 and push SAVE => reset counters
15- start ramp: 0-5s / 0-500 (100)
16- stop ramp: 0-5s / 0-500 (100)
17- start-kick 0-200ms / 0-200 (0)
  This gives full drive at start and I-lim is 30A
  The start kick length is 0-200ms.
18- I-trip auto reversing 0-5s / 0-500 (0)
  Change automatically run direction when I-trip occurs
  the revesing time will select with this parameter
19-Freewheel options. 0-3 (0)
  0= no freewheel
  1= freewheel when stop
  2= freewheel during stop ramp
  3= freewheel during stop ramp and stop

EM-241B-PLI DC-MOTOR CONTROLLER 12-24V 15A

This is modified version from EM-241B
Pulse counter block is added. This block
can be used for end limit use.

- small size
- high current output
- 2ch pulse counter inputs
- Pulse counter limits.
- current limit
- zero current limit
- overvoltage brake
- speed setting
- PWM 2 or 16 kHz
- flexible control inputs
- impulse / continuous mode
- rail base mountable
- dip switch only in PCB. version B
- A softwares compatible for B ver. PCB.
- digital parameter setting

EM-241 is a full bridge DC-motor starter. It is designed to work with DC-motor in applications where some special functions are needed. Starter has adjustable acceleration and deceleration ramps, which make possible the smooth starts and stops. Adjustable current limit protects motor against overcurrent and it can also be used as an end-stop. This device has also two settable speeds, which are usefull in positioning applications. Control inputs FW and BW start the forward and backward run. STOP is for the motor shut-down. In -PLI version there are also PULSE COUNTER which can be used for end limit use. This counter value keep in memory of card also when power is turned off. SPEED-2 input activates preset speed-2, but it can also be used as input for analog speed control signal 0-5V. FAULT terminal has at the same time input and output function, the pin is normally high, but is pulled down in overheat and conditionally also in current trip situation. If FAULT-line is pulled down externally it will cause a stop and prevent the new start. For example, it is possible to link fault pins of several units together and achieve a syncronous stop.

There are two selectable control modes, continuous and impulse. In continuous mode the motor runs as long as the control is active. In impulse mode a short comand starts the motor, and only a new impulse will change the status. There is also few special settings start-kick and auto reverse. The card has selectable input logics. Inputs are divided in two groups, control and limit -inputs. Groups can be individually set for NPN or PNP logic. The parameters are set with EM-236 interface unit. Operation of the controller and some of its functional values can also be monitored with EM-236 interface unit.

TECHNICAL DATA

Supply voltage cont. max. 10-35V
Overvoltage limit adjustable 15-40V (connect motor to freewheel)
Overvoltage dynamic brake 40V (shorting motor poles)
Start up voltage 9V, shutdown voltage 8V
Motor current cont. max. 15A, peak max. 30A (Ta<50°C)
Current limit adjustable 0.1-20A (at start max 30A)
Overheat limit 100°C
Start and stop ramp adjustable 0-5s
PWM frequency 2kHz
Speed input scale (speed-2) 0-5V = 0-100% pwm
Input control logic: high =4-30V, low=0-1V
Control input impedances typ. 47kohm
Pulse input imped. typ 10kohm
Pulse input freq max. 400Hz
Control input response time typ 5ms.
Fault out. NPN open coll. max 30V / 50mA
Fault in actives Uin < 1V (NPN)
Motor and supply connectors 2.5mm
Control connectors 1mm
Dimensions 42x72x25mm
Dimensions in DIN-rail base 45x80x45mm
CE-tested for industrial environment (emc)
Operating temp (Ta) -40...60°C
Weight 75g

EM-241B-PLI BLOCK DIAGRAM

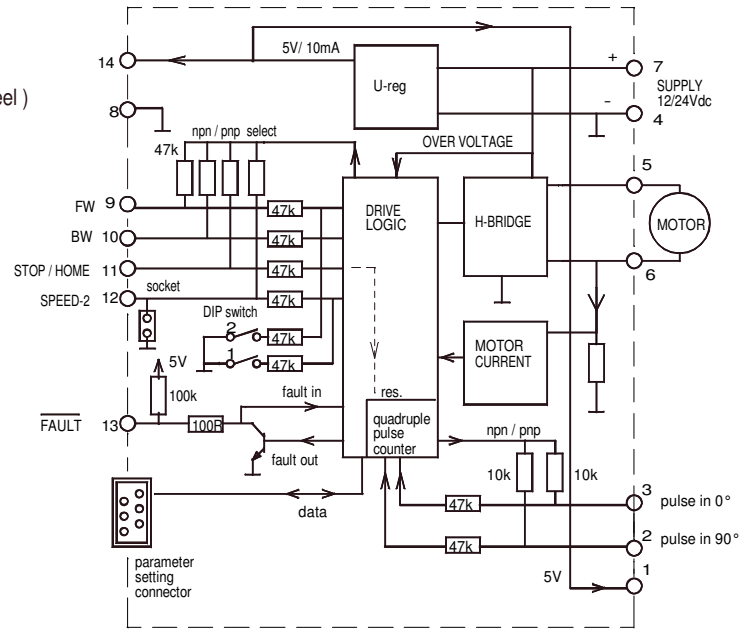

CONNECTIONS

Supply voltage must be filtered DC of 10-35V,
and ripple should be less than 30% at full load.
CAUTION ! Wrong polarity can damage the unit.
CAUTION ! Unit doesn't have an internal fuse, so
an external fuse should be added if fuse required.

MONITORABLE VALUES

1/6 Motor current 0-20A (0-200)
2/6 PWM-level-% 0-100% (0-100)
3/6 hour counter (max.65535h)
4/6 start counter (max.65535)
5/6 carry counter for start counter
6/6 pulse counter value 0-65000

FAULT-LED signal codes

1. power on	one blink
2. current on limit	led is lit
3. current trip	fast blinking...
4. zero-cur trip	long blink- short pause...
5. overvoltage	4 x blink -pause...
6. overheat	short blink- long pause...
7. timeout	3 x blink + long blink...
8. fault input	2 x short + 1x long blink...

HOME RUN = PULSE COUNTER RESET

Pulse counter have to reset to calibrate position. Calibration can be done by start HOME RUN. Then driver start to run BW direction at speed-2. In this running mode limits are not active, so motor run as long as HOME RUN is active. When HOME RUN stops the counter will reset also.
HOME RUN can be started with different way: long push same time with FW and BW commands or with STOP / HOME command or with BW commands. See parameter 21.

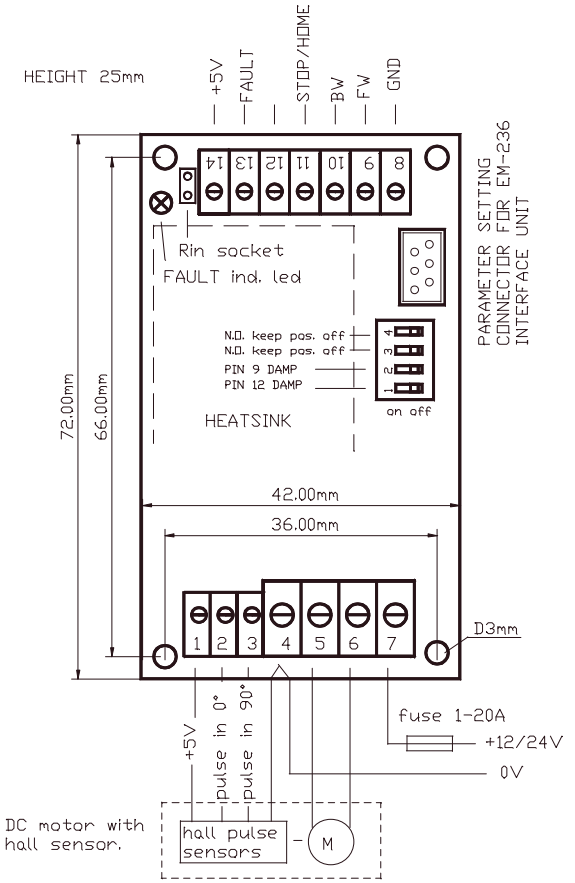

Example of function of limit. (with default values)
In limit advance point changes speed to the speed-2
In limit point the driver brakes motor to stop

ADJUSTMENT AND SETTINGS (prog ver. EM-241B PLI v1.2)

Adjusting and parameter setting of eg.
current limit value, ramp times and speed-2
value is done with the EM-236 interface unit.
With EM-236 the parameters and adjusted
values can also be copied to multible
devices accurately and reliably.

SETTABLE PARAMETERS 21pcs. (defaults in brackets)

1- command mode: 0,1 and 2 (0)
  0= continuos FW / REV
  1= impulse commands FW / REV. with stop
  2=impulse commands FW / REV without stop
2- start condition combinations: 0-3 (1)
  0= start both direction after I-trip and Stop
  1= start only opposite direction after I-trip
  2= start only opposite direction after Stop
  3= start only opposite direction after I- and Stop
3- input logic combinations 0-3 PNP/NPN (0)
  0= command and pulse inputs as PNP (positive)
  1= command inputs NPN, and pulse inputs PNP
  2= command inputs PNP. and pulse input NPN
  3= command and pulse inputs NPN (negative)
4- running speed-1: 0-100% / 0-100 (100)
5- running speed-2: 0-100% / 0-100 (50)
  Note: If selected to 0 or 1 "speed2-input" is
  used as analog 0-5V speed control input, and
  when 1 is selected FW direction is automatically
  "on" and FWD input works as direction change
6- current limit FW: 0.1-20A / 1-200 (30)
7- current limit REV: 0.1-20A / 1-200 (30)
8- Trip combinations: 0-3 (1)
  0= no I-trip, no zero-current-trip
  1= only I-trip
  2= only zero-current-trip
  3= both I-trip and zero-current-trip
9- I-trip delay: 0-255ms / 0-255 (20)
10- Fault output combinations: 0-3 (1)
  0= I-trip and zero current won´t cause fault output signal
  1= only I-trip causes fault output signal
  2= only zero current causes fault output signal
  3= both I-trip and zero currenT causes fault output signal.

11- overvoltage limit: 15-40V / 15-40 (35)
  Overvoltage can be caused by load driving the motor or
  when braking the speed down but supply can not accept
  the current back from driver. Exceeding the limit will cause
  the power stage set to free-wheel state.
  With a direct battery supply the brake current is charging the
  battery and the voltage will not normally rice.
  There is also 40V fixed dynamic brake point = motor pole shorted
12- load compensation: 0-255 / 0-255 (0)
  Load compensation (RxI) improves low speed and start
  torgue, but too high compensation achieve unstable running.
  Run motor at low speed (30%) Increase compensation
  with small steps until motor start behaviour unstable,
  t hen decrease value about 10%
13- timeout: 0-255s. / 0-255 (0=not in use) (0)
14- Reset for start and hour-counter 0/1 (0)
  selecting 1 and push SAVE => reset counters
15- start ramp: 0-5s / 0-500 (100)
16- stop ramp: 0-5s / 0-500 (100)
17- start-kick 0-200ms / 0-200 (0)
  This gives full drive at start and I-lim is 30A
  The start kick length is 0-200ms.
18- I-trip auto reversing 0-5s / 0-500 (0)
  Change automatically run direction when I-trip occurs
  the revesing time will select with this parameter
19 BW counter limit 0-65000 count / 0-65000 (1)
  Value 0 = limit is disabled
20 FW counter limit 0-65000 count / 0-65000 (1000)
  Value 0 = limit is disabled
21 BW-limit advance 0-50000count / 0-50000 (100)
22 FW-limit advance 0-50000count / 0-50000 (100)
23 HOME RUN start cond. (=pulse counter reset) 0-2 (0)
  0 = simultaneous FW & BW command 5sec. push
  1 = also stop input long push 5s. starts HOME RUN
  2 = also new 5s. BW command starts HOME RUN
    if motor has stopped on limit or if I-trip occurs.
24 PWM-frequency 1=2kHz / 2=16kHz

NOTICE.
Pulse counter should count down when motor run to BW direction or
in HOME RUN. Counter value can be monitored with monitor value 6.
IF NOT. then you have to interchange pulse input wires 2<->3 or
interchange motor wires 5<->6.

If pulses counter did not count. then check parameter 3 settings
(pulse input PNP or NPN)

Max input pulse frequency is 400Hz max.
For example: 3000rpm x 4pulses/round = 200Hz

EM-241-C DC-MOTOR CONTROLLER 12-24V 15A

- small size
- high current output
- current limit
- zero current limit
- overvoltage brake
- speed setting
- flexible control inputs
- impulse / continuous mode
- rail base mountable
- digital parameter setting
- C-version replaces A and B versions
- C-firmware can be loadad B ver. card
- C.version available with molex connector
- current limit setting input (new)
- freewheel options (new)
- 2 or 16kHz PWM freq. (new)

EM-241C is a full bridge DC-motor starter. It is designed to work with DC-motor in applications where some special functions are needed. Starter has adjustable acceleration and deceleration ramps, which make possible the smooth starts and stops. Adjustable current limit protects motor against overcurrent and it can also be used as an end-stop. This device has also two settable speeds, which are usefull in positioning applications. Control inputs FW and BW start the forward and backward run. STOP is for the motor shut-down but there are also available individual limit inputs for FW and BW directions. SPEED-2 input activates preset speed-2, but it can also be used as input for analog speed control signal 0-5V. STOP input can be set to work as current limit setting. FAULT terminal has at the same time input and output function, the pin is normally high, but is pulled down in overheat and conditionally also in current trip situation. If FAULT-line is pulled down externally it will cause a stop and prevent thenew start. For example, it is possible to link fault pins of several units together and achieve a synchronous stop. C-version includes wo new parameter: freewheel options for realease the rotor of motor. and pwm frequency select, but notice, that in silence 16kHz pwm frequency. the output current is smaller!
There are two selectable control modes, continuous and impulse. In continuous mode the motor runs as long as the control is active. In impulse mode a short comand starts the motor, and only a new impulse will change the status. There is also few special settings start-kick and auto reverse. The card has selectable input logics. Inputs are divided in two groups, control and limit -inputs. Groups can be individually set for NPN or PNP logic.
For parameters setting there is next options: EM-236 interface unit, EM-268 with EmenTool-Lite PC-program and EM-326 with EmenTool-App application for smartphone

TECHNICAL DATA (prog ver. 241Cv1.4)

Supply voltage cont. max. 10-35V
Overvoltage limit adjustable 15-40V
Start up voltage 9V, shutdown voltage 8V
Continuous current output when ambient temp is <50℃)
15A at 100% speed / 10A at 5-99% speed pwm=2kHz
10A at 100% speed / 5A at 5-99% speed pwm=16kHz
Peak (5s.) 30A at 2khz pwm and 25A at 16kHz pwm
Current limit adjustable 0.1-25A (at start max 30A)
NOTICE! during start ramp current limit is 50% boosted
Overheat limit 100℃
Start and stop ramp adjustable 0-5s
PWM frequency 2kHz / 16kHz
Speed input scale (speed-2) 0-5V = 0-100% pwm
I-limit input scale (stop input) 0-5V = 0-20A
Input control logic: high =4-30V, low=0-1V
Control input impedances typ. 47kohm
Limit FW / BW input imped. typ 10kohm
Control input response time typ 5ms.
Fault out. NPN open coll. max 30V / 50mA
Fault in actives Uin < 1V (NPN)
Motor and supply connectors 2.5mm
Control connectors 1mm
Molex connector option KK 508 / KK 6410 (see page 2)
Dimensions 42x72x25mm
Dimensions in DIN-rail base 45x80x45mm
CE-tested for industrial environment (emc)
Operating temp (Ta) -40...60℃
Weight 75g

EM-241C BLOCK DIAGRAM

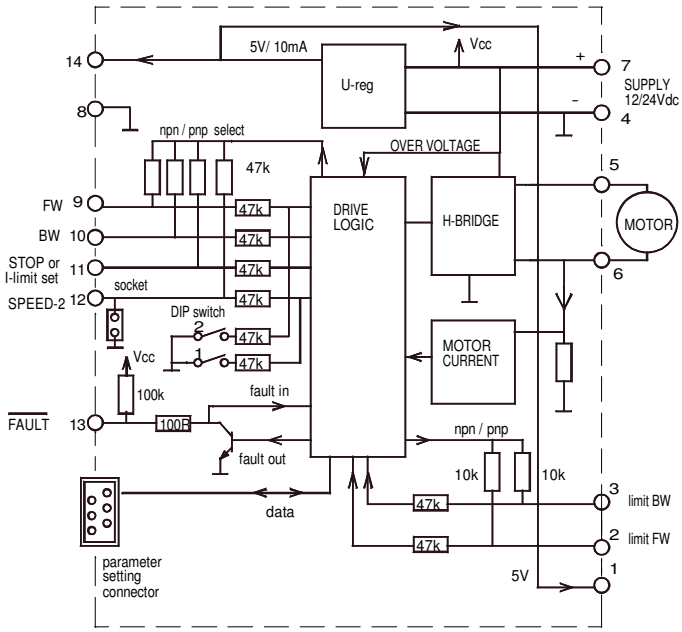

CONNECTIONS

Supply voltage must be filtered DC of 10-35V,
and ripple should be less than 30% at full load.
CAUTION ! Wrong polarity can damage the unit.
CAUTION ! Unit doesn't have an internal fuse, so
an external fuse should be added if fuse required.

MONITORABLE VALUES

1/5 Motor current 0-2.0A (0-200)
2/5 PWM-level-% 0-100% (0-100)
3/5 hour counter (max.65535h)
4/5 start counter (max.65535)
5/5 carry counter for start counter

FAULT-LED signal codes

1. power on	one blink
2. current on limit	led is lit
3. current trip	fast blinking...
4. zero-cur trip	long blink- short pause...
5. overvoltage	4 x blink -pause...
6. overheat	short blink- long pause...
7. timeout	3 x blink + long blink...
8. fault input	2 x short + 1x long blink...

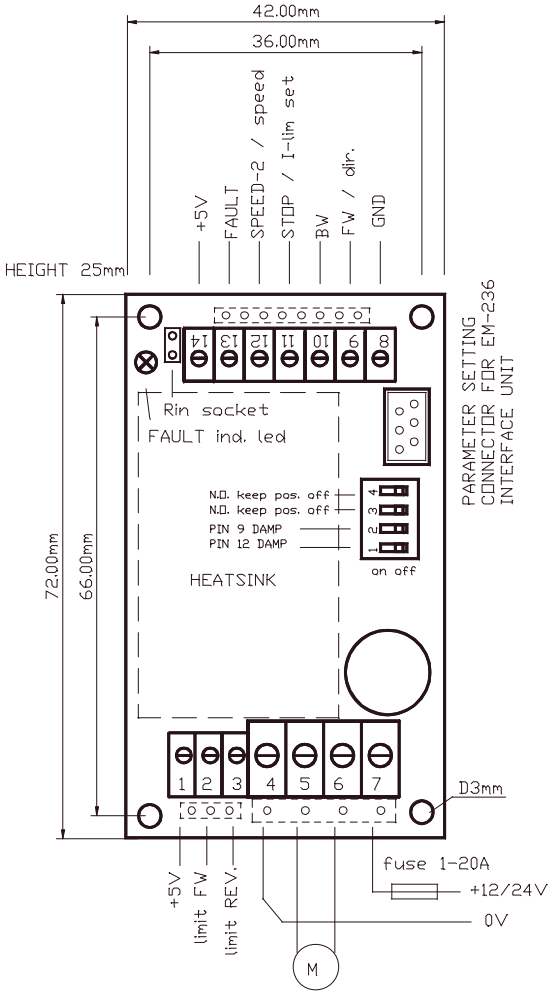

Molex connector options with dashed line
3-pin molex 22-27-2031
4-pin molex 10-08-5041
7-pin molex 22-27-2071

ADJUSTMENT AND SETTINGS (prog ver. EM-241C v.1.4)

Settings can be done with three interface device options.
1. EM-236 interface unit
2. EM-268 interface unit with EmenTool Lite PC-software
3. EM-326 interface unit with EmenTool App smartphone application
When using App you can set device-specific access code,
which protects device against unauthorized smartphone connections.
The access code can be reset with simultaneous FW and BW
comand, when power switch on.

PARAMETERS 20pcs. (defaults in brackets)

1- command mode: 0,1 and 2 (0)
0= continuos FW / REV
1= impulse commands FW / REV. with stop
2=impulse commands FW / REV without stop
2- start condition combinations: 0-3 (1)
0= start both direction after I-trip and Stop
1= start only opposite direction after I-trip
2= start only opposite direction after Stop
3= start only opposite direction after I- and Stop
3- input logic combinations 0-7 (0)
PNP control with positive signal and input has pull down res.
NPN control with negative signal and input has pull up res.
N.C. = input resistor as above, but control signal logic is inverted
0= cont. PNP, limits PNP 4=cont. PNP, limits PNP N.C.
1= cont. NPN, limits PNP 5=cont. NPN, limits PNP N.C.
2= cont. PNP, limits NPN N.C. 6=cont. PNP, limits NPN
3= cont. NPN, limits NPN N.C. 7=cont. NPN, limits NPN
4- running speed-1: 0-100% / 0-100 (100)
5- running speed-2: 0-100% / 0-100 (50)
special parameter values of param. 5
0= "speed 2-input" is used as analog 0-5V speed control input.
1= FW direction is automatically "on" and FW input works as direction change input.
6- current limit FW: 0-25A / 0-250 (30)
7- current limit REV: 0-25A / 0-250 (30)
notice! If both 6 & 7 is set = 0, then I-limit input is enabled, and works as current limit adjust input.
8- Trip combinations: 0-3 (1)
0= no I-trip, no zero-current-trip
1= only I-trip
2= only zero-current-trip
3= both I-trip and zero-current-trip
9- I-trip delay: 0-255ms / 0-255 (20)
10- Fault output combinations: 0-5 (1)
0= I-trip and zero current won´t cause fault output signal
1= only I-trip causes fault output signal
2= only zero current causes fault output signal
3= both I-trip and zero current causes fault output signal.
4 = overcurrent indication
5 = "run" indication = pull down when motor run

11- overvoltage limit: 15-40V / 15-40 (35)
Overvoltage can be caused by load driving the motor or when braking the speed down but supply can not accept the current back from driver. Exceeding the limit will cause the power stageset to free-wheel state, and if voltage still rises then powerstages shorted to brake motor more
In battery supply use the brake current is charging the battery and the voltage will not normally rice.
12- load compensation: 0-255 / 0-255 (0)
Load compensation (RxI) improves low speed and start torgue, but too high compensation achieve unstable running.
Run motor at low speed (30%) Increase compensation with small steps until motor start behaviour unstable, then decrease value about 10%
13- timeout: 0-255s. / 0-255 (0=not in use) (0)
14- Reset for start and hour-counter 0/1 (0)
selecting 1 and push SAVE => reset counters
15- start ramp: 0-5s / 0-500 (100)
16- stop ramp: 0-5s / 0-500 (100)
17- start-kick 0-200ms / 0-200 (0)
This gives full drive at start and I-lim is 30A
The start kick length is 0-200ms.
18- I-trip auto reversing 0-5s / 0-500 (0)
Change automatically run direction when I-trip occurs the revesing time will select with this parameter
19- Freewheel options 0-5 (0)
0= freewheeling when overvoltage
1= freewheeling when overv. or stopped
2= freewheeling when overv, or stop ramp
3= freewheeling when overv. or stopped or stop ramp
4= freewheeling only when stopped
5= freewheelin disabled
20- Pwm frequency 1=2kHz / 2=16kHz

EM-241C-48V DC-MOTOR CONTROLLER 24-48V 10A

- small size
- high current output
- current limit
- zero current limit
- overvoltage brake
- speed setting
- flexible control inputs
- impulse / continuous mode
- rail base mountable
- digital parameter setting
- 48V version of EM-241C
- current limit setting input (new)
- freewheel options (new)
- 2 or 16kHz PWM freq. (new)

EM-241C-48V is a full bridge DC-motor starter for nominal voltage 24, 36 or 48V. It is designed to work with DC-motor in applications where some special functions are needed. Starter has adjustable acceleration and deceleration ramps, which make possible the smooth starts and stops. Adjustable current limit protects motor against overcurrent and it can also be used as an end-stop. This device has also two settable speeds, which are usefull in positioning applications. Control inputs FW and BW start the forward and backward run. STOP is for the motor soft shut-down but there are also available individual limit inputs for FW and BW directions. SPEED-2 input activates preset speed-2, but it can also be used as input for analog speed control signal 0-5V. STOP input can be set to work as current limit setting. FAULT terminal has at the same time input and output function, the pin is normally high, but is pulled down in overheat and conditionally also in current trip situation. If FAULT-line is pulled down externally it will cause a stop and prevent the new start. For example, it is possible to link fault pins of several units together and achieve a synchronous stop. C-version includes wo new parameter: freewheel options for realease the rotor of motor. and pwm frequency select, but notice, that in silence 16kHz pwm frequency. the output current is smaller!
There are two selectable control modes, continuous and impulse. In continuous mode the motor runs as long as the control is active. In impulse mode a short comand starts the motor, and only a new impulse will change the status. There is also few special settings start-kick and auto reverse. The card has selectable input logics. Inputs are divided in two groups, control and limit -inputs. Groups can be individually set for NPN or PNP logic.
For parameters setting there is next options: EM-236 interface unit, EM-268 with EmenTool-Lite PC-program and EM-326 with EmenTool-App application for smartphone

TECHNICAL DATA (prog ver. 241C-48 v1.0)

Supply voltage range nom. 24-48V / max. 20-60V
Overvoltage limit adjustable 15-60V
Start up voltage 14V, shutdown voltage 12V
Continuous current output when ambient temp is <50°C)
10A at 100% speed / 7A at 5-99% speed pwm=2kHz
7A at 100% speed / 4A at 5-99% speed pwm=16kHz
Peak (5s.) 25A at 2khz pwm and 20A at 16kHz pwm
Current limit adjustable 0.1-25A (at start max 30A)
Overheat limit 100°C
Start and stop ramp adjustable 0-5s
PWM frequency 2kHz / 16kHz
Speed input scale (speed-2) 0-5V = 0-100% pwm
I-limit input scale (stop input) 0-5V = 0-20A
Input control logic: high =4-30V, low=0-1V
Control input impedances typ. 47kohm
Limit FW / BW input imped. typ 10kohm
Control input response time typ 5ms.
Fault out. NPN open coll. max 30V / 50mA
Fault in actives Uin < 1V (NPN)
Motor and supply connectors 2.5mm
Control connectors 1mm
Dimensions 42x72x25mm
Dimensions in DIN-rail base 45x80x45mm
CE-tested for industrial environment (emc)
Operating temp (Ta) -40...60°C
Weight 75g

EM-241C-48V BLOCK DIAGRAM

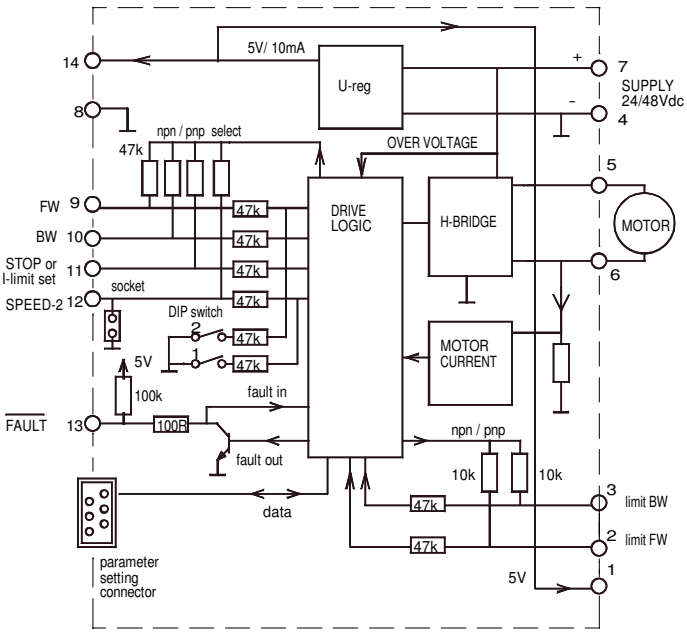

ELECTROMEN Oy www.electromen.com

24148br 5.10.15

CONNECTIONS

Supply voltage must be filtered DC of 10-35V,
and ripple should be less than 30% at full load.
CAUTION ! Wrong polarity can damage the unit.
CAUTION ! Unit doesn't have an internal fuse, so
an external fuse should be added if fuse required.

MONITORABLE VALUES

1/5 Motor current 0-20A (0-200)
2/5 PWM-level-% 0-100% (0-100)
3/5 hour counter (max.65535h)
4/5 start counter (max.65535)
5/5 carry counter for start counter

FAULT-LED signal codes

1. power on	one blink
2. current on limit	led is lit
3. current trip	fast blinking...
4. zero-cur trip	long blink- short pause...
5. overvoltage	4 x blink -pause...
6. overheat	short blink- long pause...
7. timeout	3 x blink + long blink...
8. fault input	2 x short + 1x long blink...

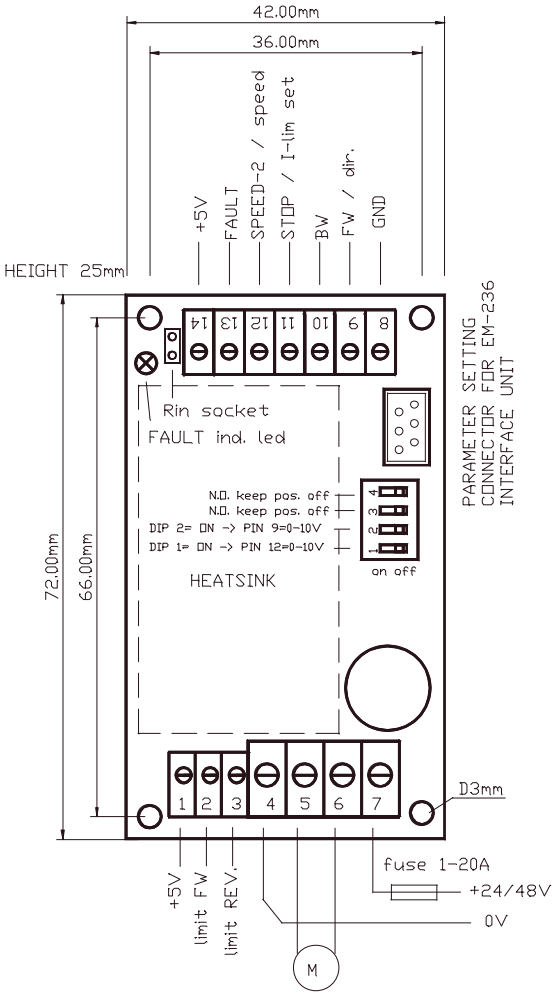

ADJUSTMENT AND SETTINGS (prog ver. EM-241C-48V v.1.0)

Settings can be done with three interface device options.
1. EM-236 interface unit
2. EM-268 interface unit with EmenTool Lite PC-software
3. EM-326 interface unit with EmenTool App smartphone application
When using App you can set device-specific access code,
which protects device against unauthorized smartphone connections.
The access code can be reset with simultaneous FW and BW
comand, when power switch on.

SETTABLE PARAMETERS 20pcs. (defaults in brackets)

1- command mode: 0,1 and 2 (0)
0= continuos FW / REV
1= impulse commands FW / REV. with stop
2=impulse commands FW / REV without stop
2- start condition combinations: 0-3 (1)
0= start both direction after I-trip and Stop
1= start only opposite direction after I-trip
2= start only opposite direction after Stop
3= start only opposite direction after I- and Stop
3- input logic combinations 0-3 PNP/NPN (0)
0= command and limit inputs as PNP (positive)
1= command inputs NPN, and limit inputs PNP
2= command inputs PNP. and limit input NPN
3= command and limit inputs NPN (negative)
4- running speed-1: 0-100% / 0-100 (100)
5- running speed-2: 0-100% / 0-100 (50)
special parameter values of param. 5
0= "speed 2-input" is used as analog 0-5V speed control input.
1= FW direction is automatically "on" and FW input works as direction change input.
6- current limit FW: 0-25A / 0-250 (30)
7- current limit REV: 0-25A / 0-250 (30)
notice! If both 6 & 7 is set = 0, then I-limit input is enabled, and works as current limit adjust input.
8- Trip combinations: 0-3 (1)
0= no I-trip, no zero-current-trip
1= only I-trip
2= only zero-current-trip
3= both I-trip and zero-current-trip
9- I-trip delay: 0-255ms / 0-255 (20)
10- Fault output combinations: 0-3 (1)
0= I-trip and zero current won´t cause fault output signal
1= only I-trip causes fault output signal
2= only zero current causes fault output signal
3= both I-trip and zero current causes fault output signal.
11- overvoltage limit: 15-60V / 15-60 (55)
Overvoltage can be caused by load driving the motor or when braking the speed down but supply can not accept the current back from driver. Exceeding the limit will cause the power stageset to free-wheel state, and if voltage still rises then powerstages shorted to brake motor more
In battery supply use the brake current is charging the battery and the voltage will not normally rice.
12- load compensation: 0-255 / 0-255 (0)
Load compensation (RxI) improves low speed and start torgue, but too high compensation achieve unstable running.
Run motor at low speed (30%) Increase compensation with small steps until motor start behaviour unstable, then decrease value about 10%
13- timeout: 0-255s. / 0-255 (0=not in use) (0)
14- Reset for start and hour-counter 0/1 (0)
selecting 1 and push SAVE => reset counters
15- start ramp: 0-5s / 0-500 (100)
16- stop ramp: 0-5s / 0-500 (100)
17- start-kick 0-200ms / 0-200 (0)
This gives full drive at start and I-lim is 30A
The start kick length is 0-200ms.
18- I-trip auto reversing 0-5s / 0-500 (0)
Change automatically run direction when I-trip occurs the revesing time will select with this parameter
19- Freewheel options 0-3 (0)
0= no freewheel
1= freewheel when stopped
2= freewheel during stop ramp.
3= freewheel during stop ramp and if stopped
20- Pwm frequency 1=2kHz / 2=16kHz

EM-241C-JS1 DC-MOTOR CONTROLLER 12-24V 15A

- JS1 is specially for joystick use
- three point calibration
- small size
- high current output
- current limit
- overvoltage brake
- 2 or 16kHz pwm frequency
- motors up to 200W
- own speed ranges for FW and REV.
- rail base mountable
- digital parameter setting
- JS1 program can be update also for standard EM-241 board

EM-241C-JS1 is a full bridge DC-motor starter. It is designed to joystick controlled DC-motor applications. Drievr has adjustable acceleration and deceleration ramps, which make possible the smooth starts and stops. Adjustable current limit protects motor against overcurrent and it can also be used as an end-stop. This device has also two settable speeds, separate speed ranges for forward and reverse direction. Control input is specially designed for joystick control. The joystick range calibration is done automatically, when calibration function is activated. Calibration detects forward, reverse and midpoint positions. FAULT terminal has at the same time input and output function, the pin is normally high, but is pulled down in overheat and conditionally also in current trip situation.
If FAULT-line is pulled down externally it will cause a stop and prevent the new start. For example, it is possible to link fault pins of several units together and achieve a syncronous stop.
There is also special settings as start-kick which could be used if there is danger of stuck. Limit input can be individually set for NPN or PNP logic.
The parameters settings can be done with various EM- interface units. Operation of the controller and some of its functional values can also be monitored with interface units.

TECHNICAL DATA (prog ver. 241C-JS1 v1.0)

Supply voltage cont. max. 10-35V
Overvoltage limit adjustable 15-40V (connect motor to freewheel)
Overvoltage dynamic brake 40V (shorting motor poles)
Start up voltage 9V, shutdown voltage 8V
Continuous current output when ambient temp. is < 50°C
15A at 100% speed / 10A at 5-99% speed (pwm freq. 2kHz)
10A at 100%speed / 5A at 5-99% speed (pwm freg 16kHz)
Peak current (5s.) 30A at 2kHz / 25A at 16khz
Current limit adjustable 0.1-25A (at start max. 30A)
Overheat limit 100°C
Start and stop ramp adjustable 0-5s
PWM frequency 2kHz / 16kHz (selectable)
Joystick input scale 0-5V or 0-10V (if dip 2 = ON)
Input control logic: high =4-30V, low=0-1V
Control input impedances typ. 47kohm
Limit FW / BW input imped. typ 10kohm
Control input response time typ 5ms.
Fault out. NPN open coll. max 30V / 50mA
Fault in actives Uin < 1V (NPN)
Motor and supply connectors 2.5mm
Control connectors 1mm
Dimensions 42x72x25mm
Dimensions in DIN-rail base 45x80x45mm
CE-tested for industrial environment (emc)
Operating temp (Ta) -40...60°C
Weight 75g

EM-241C-JS1 BLOCK DIAGRAM

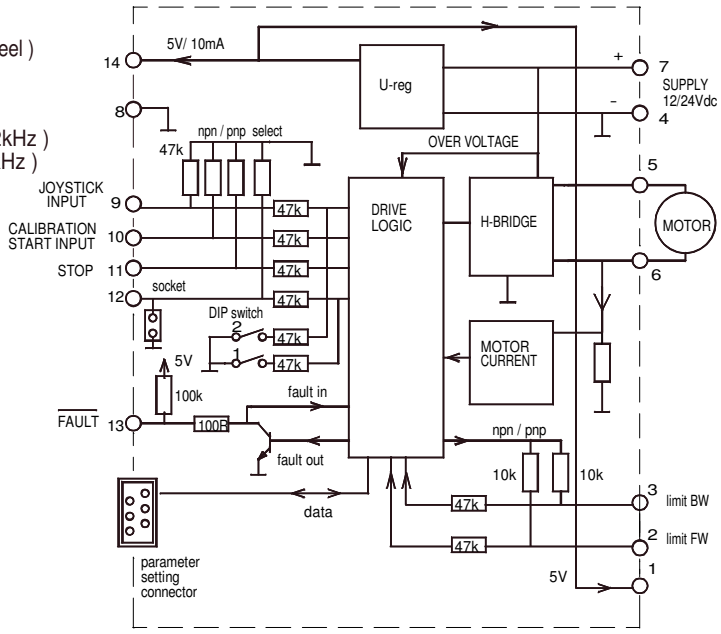

ELECTROMEN Oy www.electromen.com

CONNECTIONS

Supply voltage must be filtered DC of 10-35V,
and ripple should be less than 30% at full load.
CAUTION ! Wrong polarity can damage the unit.
CAUTION ! Unit doesn't have an internal fuse, so
an external fuse should be added if fuse required.

MONITORABLE VALUES

1/6 Motor current 0-20A (0-200)
2/6 PWM-level-% 0-100% (0-100)
3/6 hour counter (max.65535h)
4/6 start counter (max.65535)
5/6 carry counter for start counter
6/6 joystick position 0-1024

FAULT-LED signal codes

1. power on	one blink
2. current on limit	led is lit
3. current trip	fast blinking...
4. zero-cur trip	long blink- short pause...
5. overvoltage	4 x blink -pause...
6. overheat	short blink- long pause...
7. timeout	3 x blink + long blink...
8. fault input	2 x short + 1x long blink...

Special codes for calibration mode
solid light = calibration can be done
blink light = calibration is done

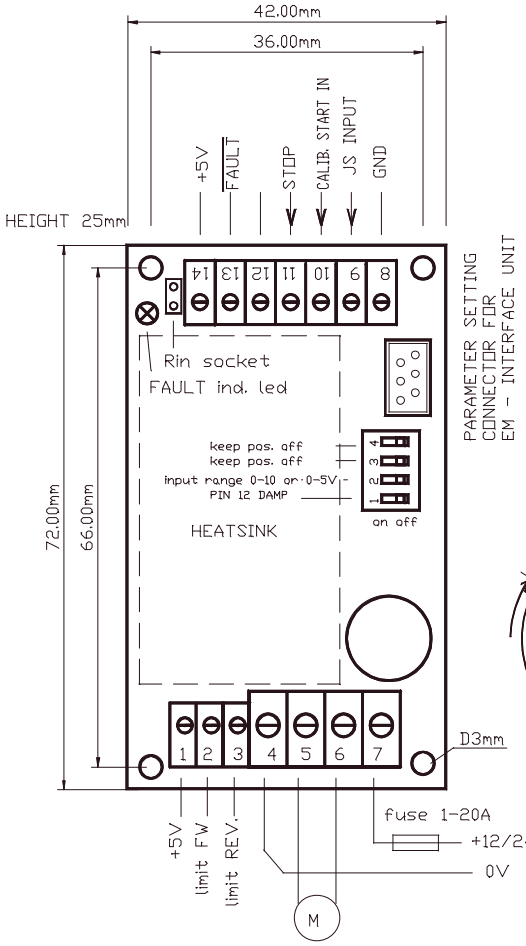

ADJUSTMENT AND SETTINGS (prog ver. EM-241C-JS1 v1.0)

Adjusting and parameter setting of eg.
current limit value, ramp times and speed-2
value can be done with various EM-interface units
EM-236 is basic parameter setting device.
EM-268 and EM- 328 are USB-serial converters,
which makes possible to set parameters also
with computer where is installed EmenTool Lite
program. EM-326 is Bluetooth -dongle which can
be used in smart devices with EmenTool App.

SETTABLE PARAMETERS 20pcs. (defaults in brackets)

1- not in use
2- not in use
3- input logic for limit inputs 1 or 2 PNP/NPN (1)
1= limit inputs PNP 2= limit input NPN
4- max. speed FW. 0-100% / 0-100 (100)
5- max. speed REV. 0-100% / 0-100 (100)
6- current limit FW. 0.1-20A / 1-200 (30)
7- current limit REV. 0.1-20A / 1-200 (30)
8- current trip 0= disabled, 1= enabled : (1)
9- not in use
10- Fault output combinations: 0-2 (0)
0= overtemp, current trip. overvoltage
1= as above + calibration indication
2= current limit indication
NOTICE ! fault input is disabled in setting 2
11- overvoltage limit: 15-40V / 15-40 (35)
Overvoltage can be caused by load driving the motor or
when braking the speed down but supply can not accept
the current back from driver. Exceeding the limit will cause
the power stage set to free-wheel state.
With a direct battery supply the brake current is charging the
battery and the voltage will not normally rise.
There is also 40V fixed dynamic brake point = motor pole shorted
12- load compensation: 0-255 / 0-255 (0)
Load compensation (RxI) improves low speed and start
torgue, but too high compensation achieve unstable running.
Run motor at low speed (30%) Increase compensation
with small steps until motor start behaviour unstable,
then decrease value about 10%
13- timeout: 0-255s. / 0-255 (0=not in use) (0)
14- reset for start and hour-counter 0/1 (0)
selecting 1 and push SAVE => reset counters
15- start ramp: 0-5s / 0-500 (50)
16- stop ramp: 0-5s / 0-500 (20)
17- start-kick 0-200ms / 0-200 (0)
This gives full drive at start and I-lim is 30A
The start kick length is 0-200ms.
18- Dead band wide 0-50% / 0-50 (5)
19- Freewheel options 0-3 (0)
0= no freewheel
1= freewheel when stopped
2= freewheel during stop ramp.
3= freewheel during stop ramp and if stopped
20- Pwm frequency 1=2kHz / 2=16kHz

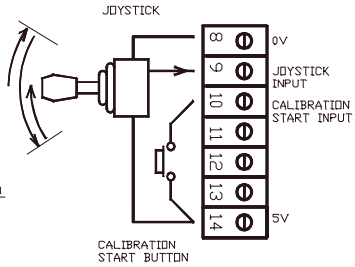

JOYSTICK CALIBRATION

Give about 3s. control signal to CALIB
input. when Fault-led of device will be lit:
-push joystick full forward, then
-pull joystick full reverse, then
-release joystick to mid position, then
-wait until led start to blink = calibration done

NOTICE ! calibration above defines joystick
full fw, full rev. and mid point positions.
But the max. speed can be set with
parameters 4 and 5

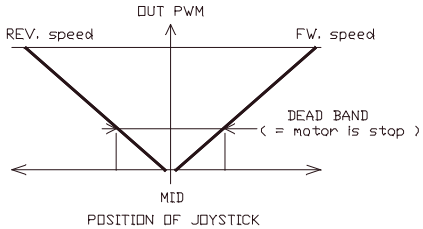

241CJSBR 15.3.16

EM-241-SAF POSITIONING DRIVER 12-24V 15A

FEATURES

- analog feedback
- voltage or mA control
- position accuracy max. 0,2%
- solid state power stage
- small size, great performance
- digitally settable parameters
- verstile dynamic settings
- housing options available
- CE marked

EM-241-SAF is a positioning driver to be used with DC-motors. The solid state power stage operates with high efficiency as it is realized with FET-transistors. Its literally everlasting compared to relay solutions. Control and feedback is done with analog signal. Control signal can be a voltage in range of 0 to 11V or current from 0 to 20mA. Feedback signal can be in the range from 0 to 11V. Driver supports also a potentiometer feedback, with auxiliary voltage outputs of 0V and 5,5V to exitate the potentiometer. The max. accuracy available for positioningof is 0,2% that is adequate for most actuator positioning applications.

The settings and adjustments are done with parameters as in all new generation Electromen products. Movement range can be modified from both ends with SW-limit parameters. Current limits and driving speeds can be set individually for both directions. Driver includes also many other dynamic adjustment possibilities like parameters for load compensation, dead-zone setting (positioning window), start and stop ramps for a smooth direction change and braking zone for well operating positioning.

The parameter setting and status monitoring is done with EM-236 Interface Unit. With EM-236 the right parameters can also be easily copied to other driver units. The on-board LED-light indicates the possible fault situations with blinking codes. If needed, the fault can be forwarded trough combiport to other driver cards. Alternatively this port can be set to give out the "position OK" information or it can even indicate the position with an analog voltage signal. Device is EMC tested for industrial and household environment and operating temperature range is quite wide.
There are also some housing options available for EM-241-SAF driver card.

TECHNICAL DATA

Supply voltage	10-35V
Shut down voltage	8V
Power up voltage	9V
Motor current cont.	15A, mom. 30A (Ta<50℃)
Current limit	0.1-20A (in start max. 30A)
Overtemp. limit	100℃
Start and stop ramp	0-5s
PWM frequency	2kHz
Analog feed-back ranges	0-5V / 0-10V
Control input ranges (position)	0-5,5V / 0-11V / 0-20mA
input impedance for mA-signal	250ohm (resistor not incl.)
Position out. signal range	0.5 - 4.5V / 0-5V
Digital input levels	high =4-30V, low=0-1V
Digital input impedances	typ. 47kohm
Limit-FW / -BW input imp.	10kohm
COMBIPORT pin 13	
fault -output NPN, open coll.	max 30V / 1A
fault -input	Uin < 1V (NPN)
indication out impedance	1kohm
Connectors for motor and supply	max. 2.5mm² cable
Connectors for signals	max. 1mm² cable
Operating temp(Ta)	-40...60℃
Measures	72x42x25mm
Weight	80g

CE-tested for industrial environment (EMC)
EN-55022B, EN-61000-4-3, -4, -5, -6 passed

EM-241-SAF BLOCK DIAGRAM

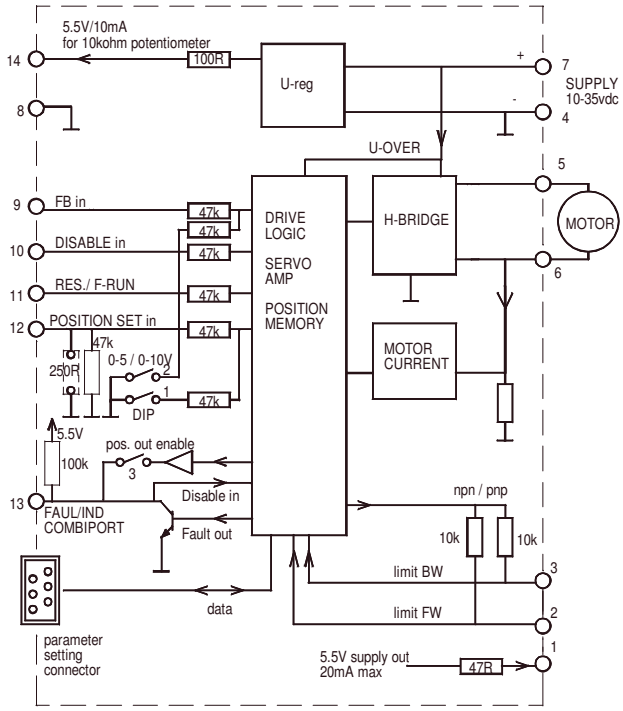

CONNECTION ADVISE

Supply voltage should be in the limits of 10-35Vdc.
Ripple should be lower than 30% even with maximum load.
NOTICES!
1. Wrong supply polarity can damage the device.
2. There is no inbuilt fuse in this device. So use an additive outside fuse and choose it according to your application.
3. The meaning of the terminals can change when changing the parameters (pls.see the parameter list and explanations).

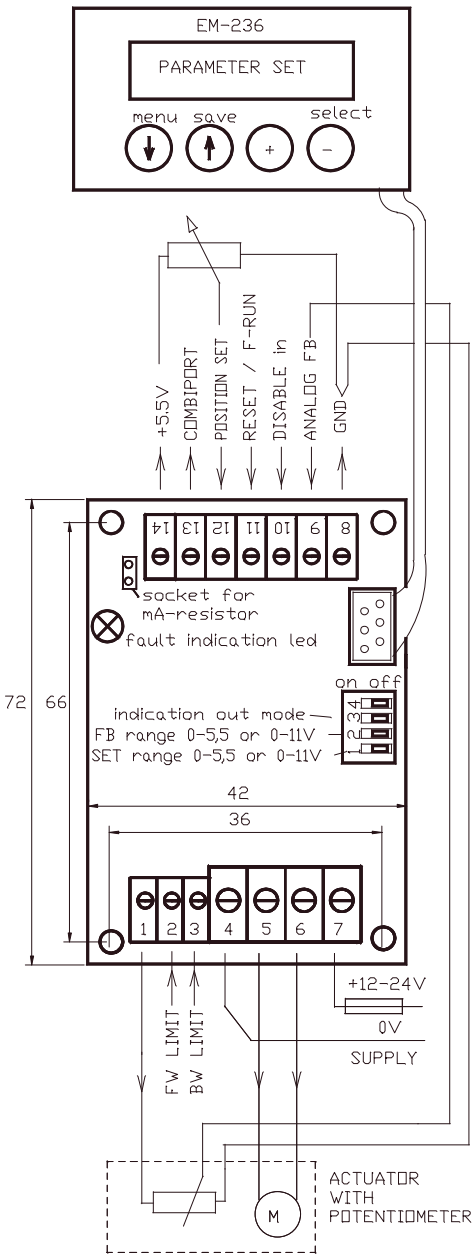

TAKING IN TO USE

The setting of the driver is done with parameters, and the parameters can be set and edited with EM-236 Interface Unit. This makes changing easy and precise. Also the copying of the same parameters to multible units is simple and same time accurate. The same parameters that are saved to one unit can be copied to an other unit with just one push of an button.
Start by checking and setting the hardware related parameters. After that the actuator can be connected and operation fine tuned with other parameters.

Control range setting
Options for max. ranges are 0 to 5,5V, and 4 to 20mA if you place a 250ohm resistor to the resistor socket on the driver board. Using 0 to 11V range requires you to set the DIP switch 1 to "ON" position.
An individual control scale you can either set with parameters 21 and 22 as Volts or you can let the driver to measure your min. and max. control values.
If you choose to set the min. and max. as Volts, pls. notice that the values are in ratio to the lowest range 0-5,50V, and with 0-11V range you have to divide the actual voltage with two. With current signal you should use the 0-5,5V range, and the right value can be calculated I x 250. Eg: 4-20mA= 1,0 - 5,0V.
Most precise way is to let the driver to measure the values. So first connect and adjust minimum value to set input (pin.12) and change the par.21 to val. 551.
After value stops blinking the dispaly shows the measured value. Then adjust the maximum control value to pin.12, and change par.22 to 551. After a while you will see the measured value in display. Always remember to to save with long push to save button, before disconnecting EM-236 and taking power off from the driver.
Notice: If control min. value is set higher than max. value the movement range will be inverted and set accordingly.

Feedback
Feedback range is always 0 to 5,5V as default.
By setting the dip switch 2 to "ON" the range can be multiplied to 0 - 11V.
If the actual feedback signal can not reach the ends of the default range, parameters 23 and 24 can be used to acommodate the ranges.
Setting the inner and outer software limits to suitable percentace values will compensate the narrow control signal range to the default range.

Forced run (F-run)
Forced run enables the motor to be driven to the mechanical end. That means that the motor or actuator can be driven beyond the determined soft ware limits. The SW-limits are used to determine the operational movement range. But the parameter 14 value and the use of F-run will enable the wider driving range for service use or for use in some special situations of the application. F-run is started with a long command (>5s) to pin 11. The F-run speed is determined with parameter 5 and the driving is stopped with current trip or limit switch that cuts off the motor current. Motor will return to its servo position right after the signal to pin 11 disappears.
Notice. The same pin 11 is used also as a reset input with short command (<5s).

Positioning dynamics

Dead zone (par.17) is to determine the accuracy of positioning.
This parameter has the major effect to positioning accuracy.
The smaller it is determined the more accurately the positioning is done.
Notice. If it is set too small compared to accuracy level of the mechanics an oscillation or unstability in positioning will occur.

Braking zone (par. 18) is used to optimize the time needed for positioning.
Too high value slows down too early, and too low value will cause an fast position passing and needs a corrective return driving.

Start and stop ramp (par. 19 & 20) are to smoothen the direction change.
Often suitable value for stop ramp is half of start ramp. Too long stop ramp can make the direction change too time consuming and too short can cause mechanical stress and non desired agressivity.

Load compensation (par.11) when set to right value, will ensure the needed force to start driving and to taking the load in to the right position.
With high load and too low load compensation value, the motor dont have force enough to reach the right position. Start testing with zero value and increase value untill motor behaves unstable and twitching. Thumb rule in this point is to decrease the value with 25%.

Current limits (par. 6 and 7)should be set according to the motor nominal max. current or according to the required current of the application.

Indications
Fault situations are indicated with coded blinking of a red LED. Fault alarm can be forwarded out trough combiport (pin.13). Fault situation is reset with a short (<5s) command to RES/F-run input (pin.11).
Some faults are reset automatically with a new position command to opposite direction. Instead of fault indication the combiport can be set to inform the status of the positioning as an "on position" output, or it can be set to give an analog position indication with 0-5V or 0.5-4.5V signal. Configuration of the combiport is done with par.9. Notice: If it is set to give analog information out (par.9 val3/4), also the DIP-switch 3 should be set to ON position. If combiport (pin 13) is selected to be fault output (par.9 val.1), it will also work as fault-disable input when externally pulled down.

Adjustments and settings
Parameter setting is done with EM-236 Interface Unit which is connected to a powered controller unit trough the red connector. During the start up routine the Interface Unit will display information about it self and then the name and program version of the target device (driver which it was connected to). Then it will stay on displaying EDIT & LOAD. Pushing the "yes" button will up load and show the parameter list of the driver. Now the user can scroll the list with arrows, and make value changes with + and - buttons. Changed value is effective after few seconds when the display stops the blinking. But notice, that the change will not be saved untill you give a long press (>5s) with the "save" button. This will save the changed list also to the EM-236s memory.
Now it is easy to copy the same parameters to the next driver. Just connect the unit to the next powered driver and after start up routine just press a long "save".
You can repeate this untill all needed units have been set.

LIST OF PARAMETERS prog. v1.1 (defaults in parentheses)

1 No function (0)
2 Limit input logic (1)
  1= PNP
  2= NPN
  3= PNP inverted
  4= NPN inverted
3 Speed FW: 20-100% / 0-100 (100)
4 Speed BW: 20-100% / 0-100 (100)
5 Speed for F-driving: 20-100% / 20-100 (60)
6 Current limit out, FW: 0.1-20A / 1-200 (30)
7 Current limit in, BW: 0.1-20A / 1-200 (30)
8 Current tripp delay: 0-255ms / 0-255 (20)
  (0=tripp not in use)
9 Combiport (pin 13) function: 1-4 (1)
  1= used as Fault in/out
  2= gives the "on position" information with 0V
  3= gives position indication with 0 - 5V
  4= gives position indication with 0.5-4.5V and fault =0V
10 Over voltage limit: 15-40V / 15-40 (35)
11 Load compensation: 0-255 / 0-255 (0)
12 Time out cut-off: 1-255s. / 1-255 (0= not in use) (0)
13 Hour and start counter reset (0)
  set value = 1 and press save -> counters are set to zero
14 Forced run function with >5s command to pin 11 (1)
  1= makes F-run to BW direction
  2= makes F-run to FW direction
15 Fault reset conditions 0-1 (1)
  0= fault needs to be reset with RESET-input (pin 11)
  1= reset and driving can be started to opposite direction
16 No function (0)
17 Dead zone : 0,2-5% / 2-50 (10)
18 Braking zone : 1 - 8% / 1 - 8 (3)
19 Start ramp : 0,1-2,5s / 0-250 (10)
20 Stop ramp : 0,1-2,5s / 0-250 (3)
21 Set value min. 0...5,50V / 0-551 (0)
22 Set value max. 0...5,50V / 0-551 (550)
23 Inner (BW) SW-limit: 0...-50% 0-500 (5)
24 Outer (FW) SW-limit: 0...+50% 0-500 (5)

FAULT LED -blinking codes

1. I-trip 1 blink
2. time out trip 2 blinks
3. over temperature 3 blinks
4. over voltage trip 4 blinks

Pls. notice:
when card is powered the LED- blinks onse.

MONITORABLE VALUES (Can be read with EM-236)

1 fault code (see the fault code list)
2 motor current 0-20A (0-200)
3 target position 0-100,0% (0-1000)
4 realized positin 0-100,0% (0-1000)
5 hour counter (max.65535h)
6 start counter (max.65535 starts)
7 start counters over flow counter (max. 65535)

ABOUT PARAMETERS

1. No function.
  This parameter position is not is use in this program.
2 Limit switch input terminals (pin 2 and 3) can be set to work with positive or negative logic. Positive =PNP, negative=NPN. The effect can also be inverted so that when signal is ON status is OK, and signal OFF status is "disable by limit".
3 & 4 are for speed setting of FW (out) and BW (in) directions.
5 the speed setting for "Forced run" (F-run).
6 & 7 current limit setting for FW (out) and BW (in) directions
8 determines the time the current is allowed to be on the limit value before driving is cut off (driver tripps off). Value is in milliseconds and if set to "0", the current tripping feature is disabled.
9 Configuring the combiport functions (pin 13). This terminal can work as combined input-output for fault. Or it can give a "position OK" signal after succesfull positioning. It can also be used to indicate the position with a continuous voltage signal (position signal). If position signal is chosen (val 2 or 3) the DIP3 must be set to "ON".
10 Over voltage protection switches the motor to free wheel. This saves the controller or other devices in supply line from over voltage in case the motor generates energy during slowing down or braking. This can happen with eg. in vehicle or lifting applications.
11 Load compensation (RxI-comp) enables good motor torque even with low speeds. It is good to start testing with zero value, but if the motor seems weak when starting with normal load, the value can be increased step by step untill there is power enough to start. Notice: Too high value is recognized from oscillation and/or twiching, If it is not possible to see the behavior of the motor and test the effect with momentary loading of a freely running motor the safest value for this parameter is zero.
12 Time out tripp will cut off the driving if continuous driving to the same direction exceeds the set value (statet in seconds).
13 This parameter is for resetting the start and hour counters. Saving value 1 will set to zero the drivers start and hour counters.
14 Parameter for choosing the forced run direction. F-run is started with long >5s command to RES/F-run terminal (pin 11)
15 Determines how the controller recovers from fault situation. Val 0. fault requires a short (<5s) reset command to pin 11. Val 1. Recovers also with an opposite direction movement request.
16 No function. Value of this parameter position has no effect.
17 Dead zone for determining the wanted positioning accuracy. If this window value is small the positioning is tended to be done more accurately. If value is too small the application is not capable to exceed this accuracy, and can not find or maintain the set position steadily. In this case the value should be increased.
18 Braking zone value is determined as a percentage of the full movement range. It determines how early driver starts to slow down before reaching the right position. Main rule is that small value for slow applications and high value for fast applications.
19 & 20 Start and stop ramps are used to smoothen the speed and direction changes. The parameter value is the time from 0-100% and from 100%-0 speed.
21 & 22 are for determining the control signal range limits. Value can be given as Volts, 0 to 550 (0 to 5,5V).
The values can also be measured automatically by setting the parameters to value to 551. The card will then measure the range min. and range max. voltages on the POSITION SET input.
Pls. read also the chapter "Control range setting".
23 & 24 Inner (BW) and outer (FW) SW-limits. With these adjustable limits the movement range can be limited to suite the application. Notice: the forced run will over drive these points.

EM-241-SPF POSITIONING DRIVER 12-24V 15A

FEATURES

- quadrature pulse counting
- multiple dynamic settings
- solid state power stage
- one or two pulse feedback
- voltage or mA control
- position accuracy max. 0.2%
- versatile setting options
- digitally settable parameters
- housing options available
- CE marked product

EM-241-SPF is a positioning driver to be used with DC-motors. The solid state power stage operates with high efficiency and as its realized with FET-transistors. Its literally everlasting compared to relay solutions. Feedback is done with one or two line pulse signal. Although position feedback can be done with one pulse line it is always preferred and more secure to do it with two 0°/90° pulse lines. This driver includes an analog control with three signal ranges, 0-5,5V, 0-11V or 4-20mA. Input is freely scalable inside the range. The max. electrical accuracy of the driver and feedback is 0.2% which is adequate for most actuator positioning applications.

The settings and adjustments are done with parameters as in all new generation Electromen products. Included in the parameters is also the learn routine which will help to determine the full movement range fast and easily. Additively the movement range can be modified from both ends with SW-limit parameters. Possible cumulating pulse count errors can be avoided with manually or automatically triggerable home drive. Current limits and driving speeds can be set individually for both directions. Driver includes also many other dynamic adjustment features like parameter for load compensation, dead-zone setting (positioning window), start and stop ramps for smooth direction change and braking zone for well operating positioning.

The parameter setting and status monitoring is done with EM-236 Interface Unit. With EM-236 the right parameters can also be copied easily to other driver units. The on-board LED-light indicates the possible fault situations with blinking codes. If needed, the fault alarm can be also given out trough combiport (pin. 13). This port can be set as "position OK." output or it can work as an analog position signal output. Additively it can work also as disable input. Device is EMC tested for industrial and household environment and operating temperature range is quite wide. There are also same housing options available for EM-241-SPF driver card as for the standard EM-241.

TECHNICAL DATA

Supply voltage	10-35V
Shut down voltage	8V
Power up voltage	9V
Motor current cont.	15A, mom. 30A (Ta<50°C)
Current limit	0.1-20A (in start max. 30A)
Overtemp. limit	100°C
PWM frequency	2kHz
Pulse sampling rate	0.2ms
Input freq. of pulse lines max	1kHz
Control input ranges (position)	0-5,5V / 0-11V / 4-20mA
Positioning potentiometer	10k recom. 22k max.
Input resistor for mA-signal	250ohm (socket on board)
Position out. signal range	0-5V or 0.5 - 4.5V, 0V for FAULT
Digital input levels	high =4-30V, low=0-1V
Digital input impedances	typ. 47kohm
Limit-FW / -BW and pulse inputs	imp. typ 10kohm
COMBIPORT pin.13	
- Fault output, NPN, open coll.	max 30V / 1A
- Disable -in	Uin < 1V (NPN)
- Indication out impedance	1kohm
Connectors for motor and supply	max. 2.5mm² cable
Connectors for signals	max. 1mm² cable
Operating temp(Ta)	-40...60°C
Dimensions	72x42x25mm
Weight	80g

CE-tested for household and industrial environment (EMC)
EN-55022B, EN-61000-4-3, -4, -5, -6 passed

EM-241-SPF BLOCK DIAGRAM

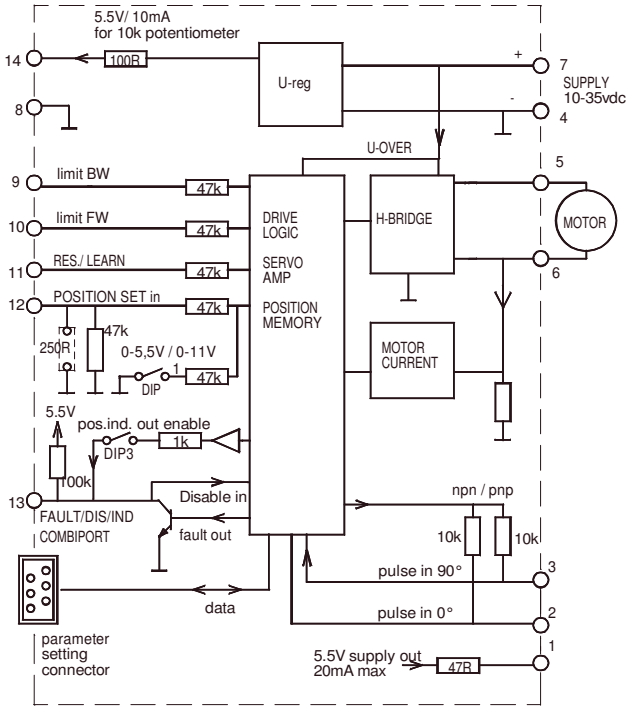

CONNECTION ADVICE

Supply voltage should be in the limits of 10-35Vdc.
Ripple should be lower than 30% even with max. load.
NOTICES !
1. Wrong supply polarity can cause damage the device.
2. There is no inbuilt fuse in this device. Use an external fuse which is chosen according to your application.
3. that function and scale of some of the input and output terminals is depending on the selected parameter values and defined ranges.
Please, see the parameter list and explanations.

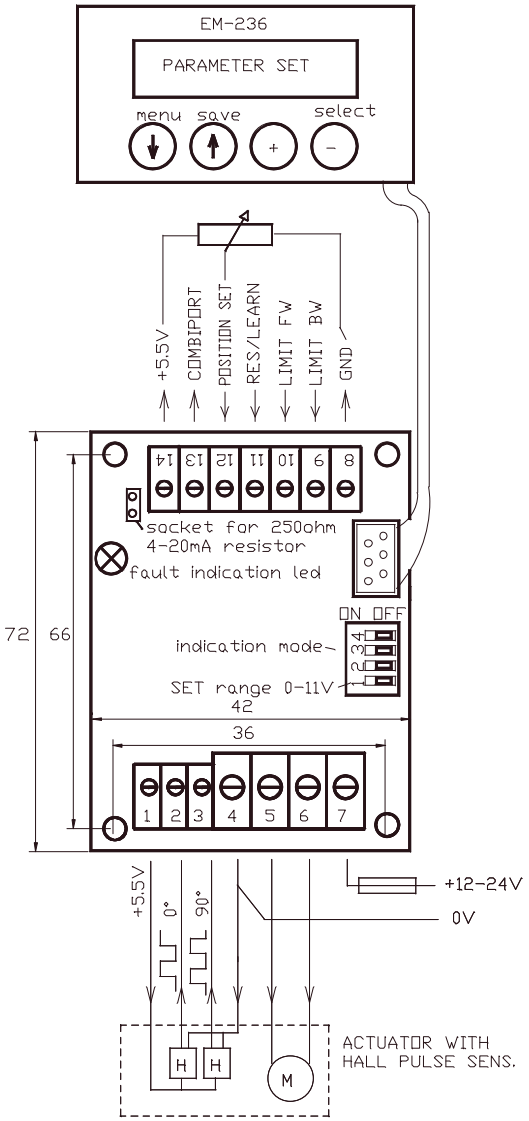

Pulse edges of 1 and 2 pulse lines

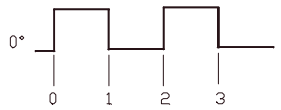

One pulse mode includes
no direction information

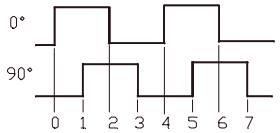

Two pulse,quadrature pulses
offers also the direction information

TAKING IN TO USE

The setting of the controller is done with parameters, and the parameters can be set and edited with EM-236 Interface Unit. Making changes is easy and precise. Copying the parameters to multible units is simple and accurate. The same parameters that are saved to one unit can be copied to an other unit with one push of a button. After the two first parameters have been set according to the application, the actuator and control wires can be connected and operation can be adjusted with the remaining parameters.

Position feedback
Select 1 or 2 pulselines with parameter 1 according to your application.
The position information has more risk to be corrupted when controller is used with one pulse line, as the signal does not have information about the direction of the movement. For example in fast direction change with difficult loads few pulses are more easily counted to wrong direction.
So it is recommended to use two pulse lines (0° and 90°) when ever available.

Full range
Full range is the full mechanical movement of the linear motor or positioning system. At first it is always needed to determine the full range before it is possible to drive the system. When the full range is determined it is also set to correspond the selected and set control range that can be for example 0-5V. Position feedback is received as pulses, and full range is determined as the number of pulse edges received during the full movement from start to end. If this number is known it can be set as the value of parameter 25 (Full range).

Home run
The position feedback is received as pulses so the driver can not know the righ position before its pulse counter is reset in some known position. Home run command will drive the motor to selected end of the full range and there it will reset the pulse edge counter. Before the positioning can be used the home run must be done. After home run the position is saved to the drivers memory and will be valid even after the power is cut off and restored. Home run is configured with parameter 14, values 1 or 2.

Learn routine
Learning is a special option for finding the full range and taking the system in use with out knowing the number of pulses for full range. Learn routine is selected with par.14 val.7. and started with 5s command to RES/LEARN input. Learn routine will drive the motor forward (FW) untill it reaches the outer end then it starts the motor backwards (BW) and drives to inner end. During this routine the driver "learns" the number of pulse edges for full range and also retrieves the absolute position by resetting the counter in the inner end. After learn routine is done the driver can be used for positioning and par 14 should be set to some suitable value for normal use of the application.
Notice: Learn routine is ran to the hard end (or to the limit switches if wired).
Notice: To see the learned and right number of the full range pulse edges, you have to down load (OK to Load&Edit) the parameters from driver with EM-236 Interface Unit once again. Or if you are wieving the par.25 while learn routine you can try to change the value and the EM-236 Interface unit will first display the learned range. After this its possible to edit this reading.

Auto home
Auto home is an automated home run that is triggered during normal operation when ever the motor is run to the FW or BW end switch or close to the sofware end limit (SW-limit). Well configured auto home can effectively prevent cumulating position error. Its specially useful when working with only one feedback pulse line. Auto home configures with par. 14 (values 3,4,5 or 6).
Notice. The auto-home will be ran to the hard end (or to the limit switches if wired).
If you choose the auto-home triggered from limit switch inputs or SW-limits, the option of using the 5seconds command to RES/LEARN input is also available.

Control range setting
Options for max. ranges are 0 to 5,5V, and 4 to 20mA if you place a 250ohm resistor to the resistor socket on the driver board.
Using 0 to 11V range requires you to set the DIP switch 1 to "ON" position.
Your individual control scale you can either set with parameters 21 and 22 as Volts or you can let the driver to measure your min. and max. control values.
If you choose to set the min. and max. as Volts, pls. notice that the values are in ratio to the lowest range 0-5,50V, and with 0-11V range you have to divide the actual voltage with two. With current signal the right value is I x 250. Eg: 4-20mA = 1,0 - 5,0V.
Most accurate way is to let the driver to measure the values. So first connect and adjust minimum value to set input (pin.12) and change the par.21 to val. 551, after value stops blinking the dispaly shows the measured value. Then adjust the maximum control value to pin.12, and change par.22 to 551. After a while you will see the measured value in display. Always remember to to save with long push to save button, before disconnecting EM-236 and taking power off from the driver.
Notice: If control min. value is set higher than max. value the movement range will be inverted and set accordingly.

Positioning dynamics (continued on the next page)

Dead zone (par.17) is to determine the accuracy of positioning.
This parameter has the major effect to positioning accuracy.
The smaller it is determined the more accurately the positioning is done.
Notice. If it is set too small compared to accuracy level of the mechanics an oscillation or unstability in positioning will occur.

Braking zone (par. 18) is used to optimize the time needed for positioning.
Too high value slows down too early, and too low value will cause an fast position passing and needs a corrective return driving.

Start and stop ramp (par. 19 & 20) are to smoothen the direction change. Often suitable value for stop ramp is half of start ramp. Too long stop ramp can make the direction change too time consuming and too short can cause mechanical stress and non desired agressivity.

Load compensation (par.11) when set to right value, will ensure the needed force to start driving and to taking the load in to the right position. With high load and too low load compensation value, the motor dont have force enough to reach the right position. Start testing with zero value and increase value untill motor behaves unstable and twitching. Thumb rule in this point is to decrease the value with 25%.

Current limits should be set according to the motor nominal max. current or according to the required current of the application (if lower than nom).

Indications
Fault situations are indicated with coded blinking of the red LED.
Fault alarm can be forwarded out trough combiport (pin.13).
Fault situation is reset with a short (<5s) command to RES/LEARN input (pin.11). Some faults are reset automatically with a new position command to opposite direction.
Instead of fault indication the combiport can be set to indicate the status of the positioning as an "on position" output, or it can be set to give an analog position information with 0-5V or 0.5-4.5V signal. Configuration of the combiport is done with par.9. Notice: If it is set to give analog information out (par.9 val3/4), also the DIP-switch 3 should be set to ON position.
If Combiport (pin 13) is selected to be fault output, it will also work as disable input when externally pulled down. If this terminal is selected to be used for indication the "disable in" function can be set and transferred to work trough limit input terminal pin 9 or pin 10 (par.15).

Adjustment and settings
Parameter setting is done with EM-236 Interface Unit, which is connected to a powered driver unit to the red connector.
During the start up routine the Interface Unit will display information about itself and then the name and program version of the target device. Then it will stay on displaying EDIT & LOAD. Pushing the "yes" button will up load and show the parameter list of the controller. Now the user can scroll the parameters with arrows, and make value changes with + and - buttons. Edited value is effective after few seconds when the value stops blinking. But notice, that the change will not be saved untill you give a long push (>2s) to the "save" button. This will save the values to the EM-236s memory also. Now it is easy to copy the same values to an other driver. Just connect the unit to a powered driver and after the start up routine just press a long "save". You can repeat this untill all needed units have been configured.

LIST OF PARAMETERS prog. v1.3 (defaults in parentheses)

1 Feed-back mode : one-pulse=1, dual-pulse=2 (1)
2 Limit and pulse input logic (1)
  1= limit inputs PNP / pulse inputs PNP
  2= limit inputs PNP / pulse inputs NPN
  3= limit inputs PNP inverted / pulse inputs PNP
  4= limit inputs PNP inverted / pulse inputs NPN
3 Speed FW: 20-100% / 0-100 (100)
4 Speed BW: 20-100% / 0-100 (100)
5 Speed HOME/LEARN: 20-100% / 20-100 (60)
6 Current limit out, FW: 0.1-20A / 1-200 (30)
7 Current limit in, BW: 0.1-20A / 1-200 (30)
8 Current trip delay: 0-255ms / 0-255 (100)
  (0 = tripp not in use)
9 Combiport (pin 13) function: 1-4 (1)
  1= used as Fault out / Disable in (fault/dis=0V)
  2= gives the "on position" data (on pos=0V)
  3= gives position info out with 0-5V
  4= gives position info with 0.5-4.5V and fault =0V
10 Over voltage limit: 15-40V / 15-40 (35)
11 Load compensation: 0-255 / 0-255 (0)
12 Time out: 1-255s. / 1-255 (0= not in use) (0)
13 Hour and start counter reset (0)
  set value = 1 and press SAVE -> hour and start counter reset
14 Home run / learn function: 1-7 (1)
  1= Home run with RES / LEARN input to BW direction (>5s. comm.)
  2= Home run with RES / LEARN input to FW direction (>5s. comm.)
  3= Auto-Home from BW LIMIT input to BW direction (pin 9)
  4= Auto-Home from FW LIMIT input to FW direction (pin 10)
  5= Auto-Home triggered with inner soft limit to BW direction
  6= Auto-Home triggered with outer soft limit to FW direction
  7= Learn routine with >5s command to RES /LEARN input (pin.11)
15 Disable input configuration (0)
  0= Disable only to pin.13, 1=disable to pin.10, 2=disable to pin.9
16 Not in use
17 Dead zone : 0,2-5% / 2-50 (10)
18 Braking zone : 1-8% / 1-8 (3)
19 Start ramp : 0.1-2.5s / 0-25 (10)
20 Stop ramp : 0.1-2.5s / 0-25 (3)
21 Set value min: 0...5.50V / 0-551 (0)
22 Set value max: 0...5.50V / 0-551 (550)
  For parameters 21 and 22 value 551 will do an auto setting
23 Inner (BW) SW-limit: 0...+50% / 0-500 (5)
24 Outer (FW) SW-limit: 0...-50% / 0-500 (5)
25 Full range (pulse edges) 100-65535 / 100-65535 (1000)

FAULT LED -blinking codes

1. I-trip 1 blink
2. pulse lost 2 blink
3. over temperature 3 blink
4. over voltage 4 blink
5. time out trip 5 blink
6. learn corrupted 6 blink

MONITORABLE VALUES (Can be read with EM-236)

1 fault code (see above) 1-6
2 motor current 0-20A / 0-200
3 target position 0-100,0% (0-1000)
4 realized position 0-100,0% (0-1000)
5 position as pulse edges 0-65535
6 hour counter (max.65535h)
7 start counter (max.65535)
8 start counters over flow counter (max. 65535)

ABOUT PARAMETERS

1. Feedback mode is a mandatory setting to be done according to the application. 1= for one pulse line only, 2= two pulse lines for 0° and 90° pulses.
2. Limit and pulse inputs (pins 9, 10, 2 and 3) can be set to work with positive or negative logic. Signal can be either pulling up =PNP or down to 0V which is often marked as NPN signal.
3 & 4 driving speed to FW (out) and BW (in) directions.
5 The speed setting for "home run" and "learn" routines.
6 & 7 Current limit setting for FW (out) and BW (in) driving directions.
8 Current tripp delay time 1-255ms, if set to 0 the tripp is disabled
9 Combiport configuration (pin 13). This terminal can work as combined input-output. It can be fault output and disable input or an on position indicator giving an "on position" signal after a succesfull positioning. It can also be used to indicate the position with continuous voltage signal 0-5V (val.3) or 0,5-4,5V + 0V fault (val.4).
Notice: With val. 3 or 4, also the DIP3 must be set to "ON" position.
10 Over voltage limit. Motor is switched to free wheel if the selected voltage level is exceed. This saves the driver or other devices in supply line from over voltages in case the motor generates surplus energy during slow down or braking.
This can happen eg. in vehicle or lifting applications.
11 Load compensation (RxI-comp) ensures good torque with low speeds. It is good to start testing with zero value, but if the motor seems weak when starting or slowing down to the right position this value can be increased carefully and step by step.
Notice: Too high value is recognized from oscillation and/or twiching.
12 Time out tripp will cut off the driving if continuous driving to the same direction exceeds the set value (statet in seconds).
13 Usage counter reset parameter is for manual reset of counters. Choosing and saving value 1 will reset the hour and start counters.
14 Home run direction and start condition setting or enabling the learn routine for finding the full movement range.
Home run can allways be started with RES/LEARN input (pin 11).
Auto home can be started with actual limit switch inputs or with so called SW-limits (par. 23 and 24). Last special option (value 7) is for starting the learn routine. That is an end to end drive routine to count and determine the real full movement range.
15 In case the pin.13 is used for indication, the limit switch inputs pin 9 or 10 can be configured to work as disable input.
16 Not in use in this program version.
17 Dead zone is for determining the suitable positioning accuracy. If this positioning window value is small the positioning is tended to be done more accurately. If value is too small compared to the accuracy of the other parts of the application, the system might not be able to work properly. Notice. Other parameters like braking zone and FW/BW speed settings will also affect to the positioning behaviour.
18 Braking zone value is determined as a percentage of the full movement range. It determines how early driver starts to slow down before reaching the right position. Main rule is that small value for slow applications and high value for fast applications.
19 & 20 Start and stop ramps are used to smoothen the speed and direction changes. Its the time from 0-100% or from 100%-0 speed.
21 & 22 are for determining the control signal range limits. Value can be given as Volts, 0 to 550 (0 to 5,5V), or the min. and max. values can be measured automatically by setting value to 551. Then the card will measure the signal in the POSITION SET input. Pls. read also the chapter "Control range setting".
23 & 24 Inner (BW) and outer (FW) SW-limits. With these adjustable limits the movement range can be limited to suite the application. Notice: if either of these SW-limits is used for auto-home (par.14) the motor will drive over the limit when executing the home run.
25 The full-range is determined by setting the known or calculated full range pulse edge count to be the parameter value. Alternatively the value can be defined by making the learn run (par.14 val.7) Notice. The learned pulse edge number is up dated to the EM-236 Interface unit display when you make a new Load & Edit data query or try to change the value right after learn routine.
to change

EM-243A DC-MOTOR CONTROLLER 12-42V 50A

FEATURES

- small size
- high current output
- current limit
- zero current limit
- speed setting
- flexible control inputs
- impulse / continuous mode
- rail base mountable
- digital parameter setting
- A-vers. compatible with older version
  +higher supply voltage area
  +higher fault output current.
  +input damping with dip-switch

EM-243A is a full bridge DC-motor starter. It is designed to work with DC-motor in applications where some special functions are needed. Starter has adjustable acceleration and deceleration ramps, which make possible the smooth starts and stops. Adjustable current limit protects motor against overcurrent and it can also be used as an end-stop. This device has also two settable speeds, which are usefull in positioning applications. Control inputs FW and BW start the forward and backward run. STOP is for the motor shut-down but there are also available individual limit inputs for FW and BW directions. SPEED-2 input activates preset speed-2, but it can also be used as input for analog speed control signal 0-5V. FAULT terminal has at the same time input and output function, the pin is normally high, but is pulled down in overheat and conditionally also in current trip situation. If FAULT-line is pulled down externally it will cause a stop and prevent the new start. For example, it is possible to link fault pins of several units together and achieve a syncronous stop.
There are 2 selectable control modes, contionuous and impulse. In continuous mode the motor runs as long as the control is active. In impulse mode a short comand starts the motor, and only a new impulse will change the status. The card has selectable input logics. Inputs are divided in two groups, control and limit -inputs. Groups can be individually set for NPN or PNP logic. The parameters are set with EM-236 interface unit. Operation of the controller and some of its functional values can also be monitored with EM-236 interface unit.

TECHNICAL DATA

Supply voltage nominal 12-42V, limits 10-55V
Start up voltage 9V, shutdown voltage 8V
Idle current typ 15mA
Motor current max. continous 50A (at 25°C amb temp), 40A (at 60° amb temp) and peak 100A (5s)
Current limit adjustable 1-100A (at start 1.5 times)
Overheat limit 100°C
Start and stop ramp adjustable 0-5s
PWM frequency 2kHz
Speed input scale (speed-2) 0-5 or 0-10V= 0-100% pwm
Input control logic: high =4-30V, low=0-1V
Control input impedances typ. 10kohm
Control input response time typ 5ms.
Fault out. NPN open coll. max. 50V / 1A
Fault in actives Uin < 1V (NPN)
Motor and supply connectors 2.5mm
Control connectors 1mm
Dimensions 107x72x40mm
Dimensions in DIN-rail base 110x80x55mm
CE-tested for industrial environment (EMC)
Operating ambient temp (Ta) -40...60°C
Weight 190g

EM-243A BLOCK DIAGRAM

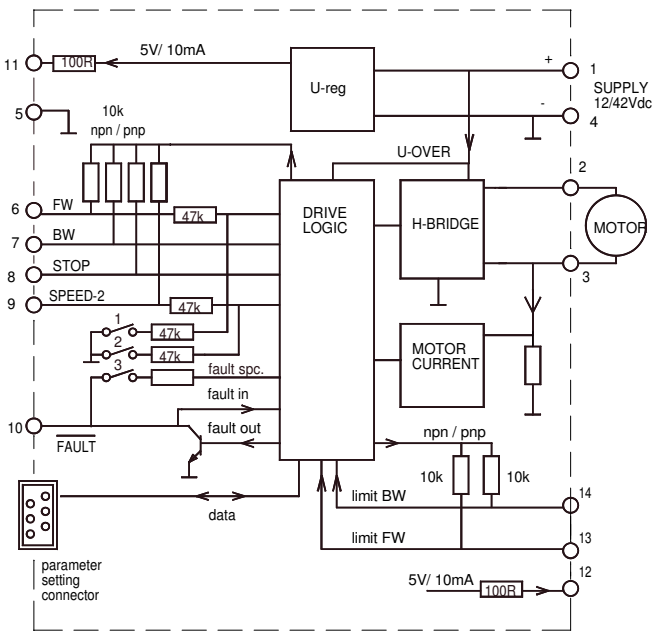

ELECTROMEN Oy

www.electromen.com

CONNECTIONS

Supply voltage recomendation is 12-42VDC
and ripple should be less than 30% at full load.
Supply voltage limit is 55Vdc
CAUTION ! Wrong polarity can damage the unit.
CAUTION ! Unit doesn't have an internal fuse, so
an external fuse should be added if fuse required.

MONITORABLE VALUES

1/5 Motor current 0-100A (0-100)
2/5 PWM-level-% 0-100% (0-100)
3/5 hour counter (max.65535h)
4/5 start counter (max.65535)
5/5 carry counter for start counter

FAULT-LED signal codes

1. power on	one blink
2. current on limit	led is lit
3. current trip	fast blinking...
4. zero-cur trip	long blink- short pause...
5. overvoltage	4 x blink -pause...
6. overheat	short blink- long pause...
7. timeout	3 x blink + long blink...
8. fault input	2 x short + 1x long blink...

ADJUSTMENT AND SETTINGS

Adjusting and parameter setting of eg.
current limit value, ramp times and speed-2
value is done with the EM-236 interface unit.
With EM-236 the parameters and adjusted
values can also be copied to multible
devices accurately and reliably.

DIP SWITCHES

A-version has a dip swithes, When switch are
in OFF position the card will be compatible with
earlier version.

Dip-1 ON pos. damping FWD input
Dip-2 ON pos. damping Speed-2 input with 2
Dip-3 ON pos. special Fault output select
Dip-4 ON pos. special clock

SETTABLE PARAMETERS
prog. 243A v1.0 (defaults in brackets)

1 command mode: continuous = 0, impulse= 1 (0)
2 start condition combinations: 0-3 (1)
0= start both direction after I-trip and Stop
1= start only opposite direction after I-trip
2= start only opposite direction after Stop
3= start only opposite direction after I- and Stop
3 input logic combinations 0-3 PNP/NPN (0)
0= command and limit inputs as PNP (positive)
1= command inputs NPN, and limit inputs PNP
2= command inputs PNP. and limit input NPN
3= command and limit inputs NPN (negative)
4 running speed-1: 0-100% / 0-100 (100)
5 running speed-2: 0-100% / 0-100 (50)
Note: If selected to 0 "speed2-input" is
used as analog 0-5V speed control input.
6 current limit FW: 1-100A / 1-100 (10)
7 current limit REV: 1-100A / 1-100 (10)
8 Trip combinations: 0-3 (1)
0= no I-trip, no zero-current-trip
1= only I-trip
2= only zero-current-trip
3= both I-trip and zero-current-trip
9 I-trip delay: 0-255ms / 0-255 (20)
10 Fault output combinations: 0-3 (1)
0= I-trip and zero current won´t cause fault output signal
1= only I-trip causes fault output signal
2= only zero current causes fault output signal
3= both I-trip and zero currenT causes fault output signal.

11 overvoltage limit: 15-60V / 15-60 (55)
Overvoltage can be caused by load driving the motor or
when braking the speed down but supply can not accept
the current back from driver. Exceeding the limit will cause
the power stage set to free-wheel state.
With a direct battery supply the brake current is charging the
battery and the voltage will not normally rice.
12 load compensation: 0-255 / 0-255 (0)
Load compensation (RxI) improves low speed and start
torgue, but too high compensation achieve unstable running.
Run motor at low speed (30%) Increace compensation
with small steps until motor start behaviour unstable,
then decrease value about 10%
13 timeout: 0-255s. / 0-255 (0=not in use) (0)
14 reset for start and hour-counter 0/1 (0)
selecting 1 and push save = reset counters
15 start ramp: 0-5s / 0-500 (100)
16 stop ramp: 0-5s / 0-500 (100)
17 start kick 0-200ms / 0-200 (0)
gives short 0-200ms full drive pulse for start

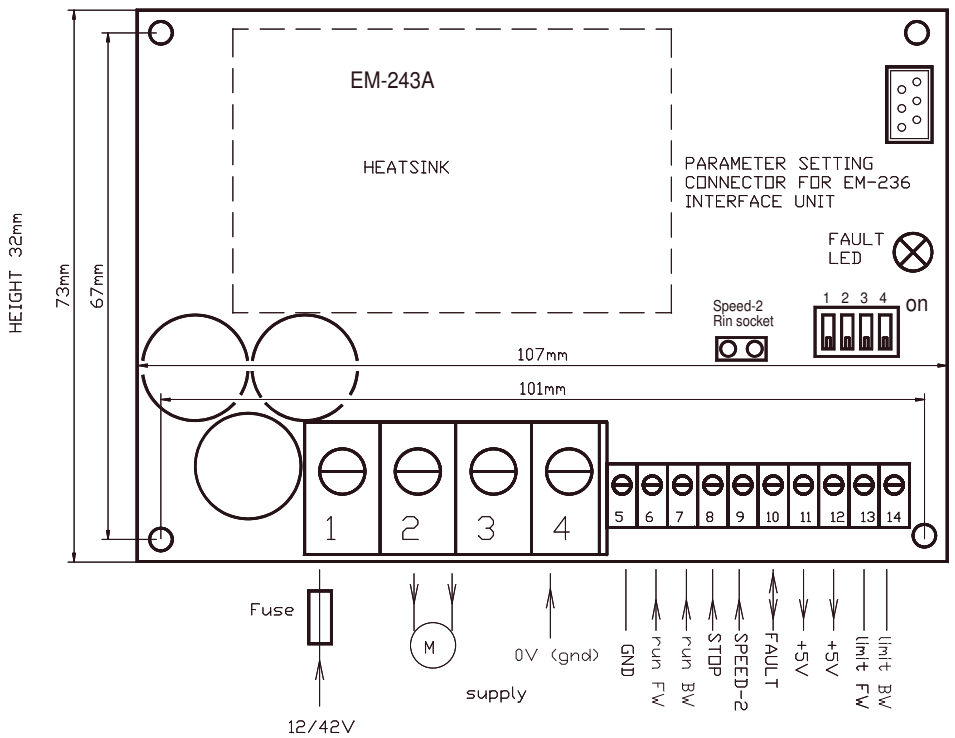

EM-243C DC-MOTOR CONTROLLER 12-48V 50A

FEATURES (notice Prog. and PCB versions)

- small size
- high current output
- current limit
- zero current limit
- speed setting
- flexible control inputs
- impulse / continuous mode
- rail base mountable
- digital parameter setting
- C ver. card compatible with A version card
- C firmware can be loaded A-ver. card
- C ver. new features
  + freewheel options parameter (param 19)
  + 2 or 16kHz pwm freq.select (param. 20)
  + current limit analog input (param 6&7)
  + speed+dir operating mode (param. 5)
  + Fan and Brake available in board 243C v.2
  + Extend operating voltage in board 243C v.2

EM-243C is a full bridge DC-motor starter. It is designed to work with DC-motor in applications where some special functions are needed. Starter has adjustable acceleration and deceleration ramps, which make possible the smooth starts and stops. Adjustable current limit protects motor against overcurrent and it can also be used as an end-stop. This device has also two settable speeds, which are usefull in positioning applications. Control inputs FW and BW start the forward and backward run. STOP is for the motor shut-down but there are also available individual limit inputs for FW and BW directions. SPEED-2 input activates preset speed-2, but it can also be used as input for analog speed control signal 0-5V. FAULT terminal has at the same time input and output function, the pin is normally high, but is pulled down in overheat and conditionally also in current trip situation. If FAULT-line is pulled down externally it will cause a stop and prevent the new start. For example, it is possible to link fault pins of several units together and achieve a syncronous stop.
There are 2 selectable control modes, contionuous and impulse. In continuous mode the motor runs as long as the control is active.
In impulse mode a short comand starts the motor, and only a new impulse will change the status. The card has selectable input logics.
Inputs are divided in two groups, control and limit -inputs. Groups can be individually set for NPN or PNP logic. The parameters are set with EM-236 interface unit. Operation of the controller and some of its functional values can also be monitored with EM-236 interface unit.
In C-version program is possible to select 16kHz pwm frequency (= silent) but notice that current output capability is lower with 16kHz.

TECHNICAL DATA

Supply voltage nominal 12-48V, limits 10-58V
Start up voltage 9V, shutdown voltage 8V
Idle current typ 15mA
Motor current max. with 2kHz pwm
100% pwm 50A , 20-99pwm% 35A and peak 100A (5s)
Motor current max. with 16kHz pwm
100% pwm 40A , 20-99pwm% 20A and peak 60A (5s)
Current limit adjustable 1-100A
NOTICE ! during start ramp the current limit is 50% boosted
Overheat limit 100℃
Start and stop ramp adjustable 0-5s
PWM frequency 2kHz or 16kHz
Speed input scale (speed-2) 0-5 or 0-10V= 0-100% pwm
I-limit input scale (stop) 0-4V = 0-100A
Input control logic: high =4-30V, low=0-1V
Control input impedances typ. 10kohm
Control input response time typ 5ms.
Fault out. NPN open coll. max. 40V / 1A
Fault in actives Uin < 1V (NPN)
Fan-output switch on 55℃, off 50℃ (only pcb Cv.2 of later)
Fan-output NPN max. 40V 2A
Break load output Max. 60V 5A
Vout lim output max 25V 15mA
Motor and supply connectors 2.5mm
Control connectors 1mm
Dimensions 107x72x40mm
Dimensions in DIN-rail base 110x80x55mm
CE-tested for industrial environment (EMC)
Operating ambient temp (Ta) -40...60℃
Weight 190g

EM-243C PCB v.4 BLOCK DIAGRAM

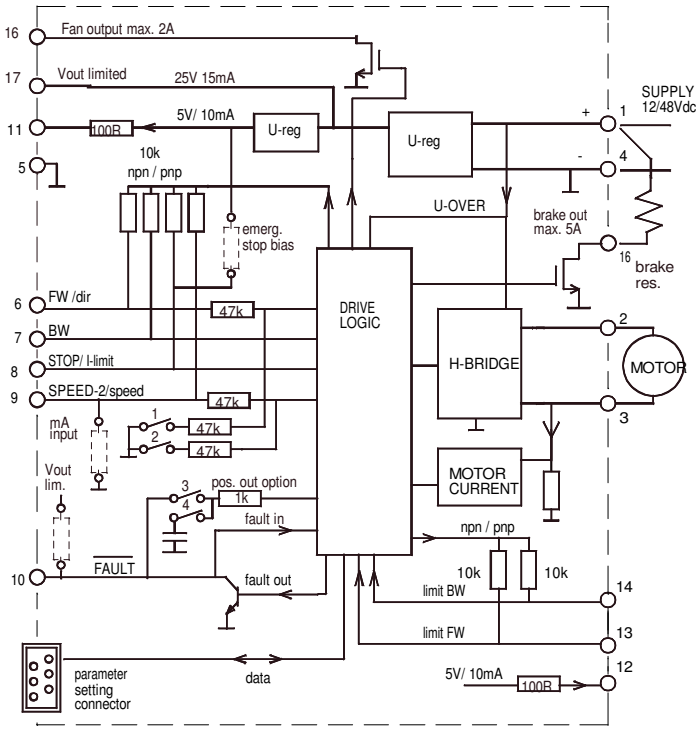

243cbr14 18.09.17

ELECTROMEN Oy www.electromen.com

CONNECTIONS

Supply voltage recomendation is 12-48VDC
and ripple should be less than 30% at full load.
Supply voltage limit is 58Vdc
CAUTION ! Wrong polarity can damage the unit.
CAUTION ! Unit doesn't have an internal fuse, so
an external fuse should be added if fuse required.

MONITORABLE VALUES

1/5 Motor current 0-100A (0-100)
2/5 PWM-level-% 0-100% (0-100)
3/5 hour counter (max.65535h)
4/5 start counter (max.65535)
5/5 carry counter for start counter

FAULT-LED signal codes

1. power on	one blink
2. current on limit	led is lit
3. current trip	fast blinking...
4. zero-cur trip	long blink- short pause...
5. overvoltage	4 x blink -pause...
6. overheat	short blink- long pause...
7. timeout	3 x blink + long blink...
8. fault input	2 x short + 1x long blink...

ADJUSTMENT AND SETTINGS (prog. EM-243C v.1.4)

Settings can be done with 3 interface device options.
1. EM-236 interface unit
2. EM-268 or 328 interface units with EmenTool Lite PC-software
3. EM-326 interface unit with EmenTool App smartphone
application. If using App you can set device-specific
access code, which protects device against
unauthorized smartphone connections.
The access code can be reset with simultaneous
FW and BW comand, when power switch on.

DIP SWITCHES

A-version has a dip swithes, When switch are
in OFF position the card will be compatible with
earlier version.

Dip-1 ON pos. damping FWD input (pin 6)
Dip-2 ON pos. damping Speed-2 input with 2 (pin9)
Dip-3 position output option, keep OFF
Dip-4 position output option, keep OFF

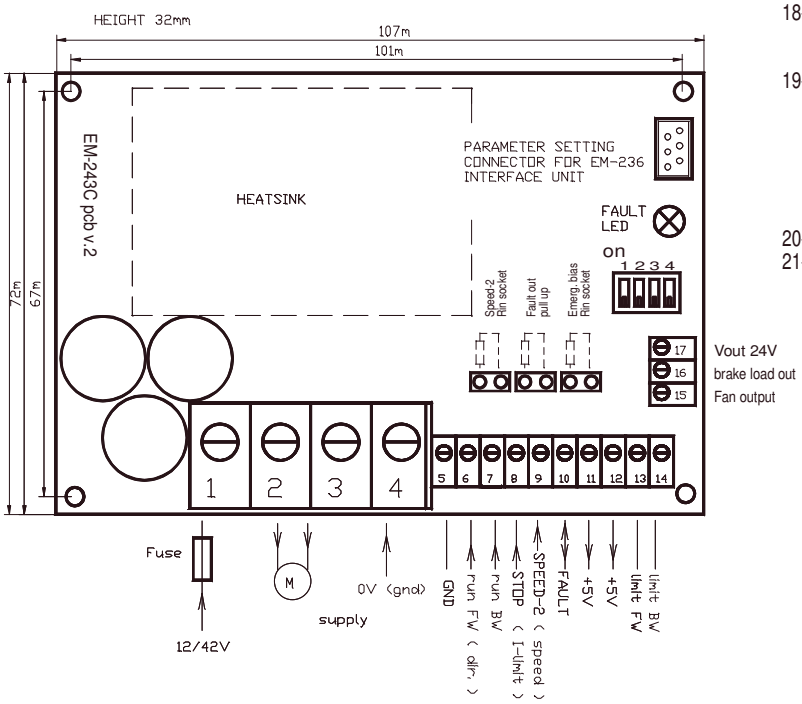

SETTABLE PARAMETERS
prog. 243C v1.4 (defaults in brackets)

1 command mode: continuous = 0, impulse= 1 (0)
2 start condition combinations: 0-3 (1)
0= start both direction after I-trip and Stop
1= start only opposite direction after I-trip
2= start only opposite direction after Stop
3= start only opposite direction after I- and Stop
3 input logic combinations 0-7 PNP/NPN (0)
PNP control with positive signal and input has pull down res.
NPN control with negative signal and input has pull up res.
N.C. = input resistor as above, but control signal logic is inverted
0= cont. PNP, limits PNP 4=cont. PNP, limits PNP N.C.
1= cont. NPN, limits PNP 5=cont. NPN, limits PNP N.C.
2= cont. PNP, limits NPN N.C. 6=cont. PNP, limits NPN
3= cont. NPN, limits NPN N.C. 7=cont. NPN, limits NPN
4 running speed-1: 0-100% / 0-100 (100)
5 running speed-2: 0-100% / 0-100 (50)
0= "speed 2-input" is used as analog 0-5V speed control input.
1= as above but FW direction is automatically "on" and
FW input works as direction change input.
6 current limit FW: 1-100A / 1-100 (10)
7 current limit REV: 1-100A / 1-100 (10)
NOTICE ! If both 6 & 7 is set = 0, then I-limit input is enabled,
and works as current limit adjust input.
8 Trip combinations: 0-3 (1)
0= no I-trip, no zero-current-trip
1= only I-trip
2= only zero-current-trip
3= both I-trip and zero-current-trip
9 I-trip delay: 0-255ms / 0-255 (20)
10 Fault output combinations: 0-3 (1)
0= I-trip and zero current won´t cause fault output signal
1= only I-trip causes fault output signal
2= only zero current causes fault output signal
3= both I-trip and zero currenT causes fault output signal.
4= overcurrent indication = pull down
5= "run" indication = pull down when motor run

11 overvoltage limit: 15-60V / 15-60 (55)
Overvoltage can be caused by load driving the motor or
when braking the speed down but supply can not accept
the current back from driver. Exceeding the limit will cause
the power stage set to free-wheel state.
With a direct battery supply the brake current is charging the
battery and the voltage will not normally rice.
12 load compensation: 0-255 / 0-255 (0)
Load compensation (RxI) improves low speed and start
torgue, but too high compensation achieve unstable running.
Run motor at low speed (30%) Increace compensation
with small steps until motor start behaviour unstable,
then decrease value about 10%
13 timeout: 0-255s. / 0-255 (0=not in use) (0)
14 reset for start and hour-counter 0/1 (0)
selecting 1 and push save = reset counters
15 start ramp: 0-5s / 0-500 (100)
16 stop ramp: 0-5s / 0-500 (100)
17 start kick 0-200ms / 0-200 (0)
gives short 0-200ms full drive pulse for start
18- I-trip auto reversing 0-5s / 0-500 (0)
Change automatically run direction when I-trip occurs
the revesing time will select with this parameter
19- Freewheel options 0-5 (0)
0= freewheeling when overvoltage
1= freewheeling when overv. or stopped
2= freewheeling when overv. or during stop ramp
3= freewheeling when overv. or when stopped or during stop ramp
4= freewheeling when stopped
5 =freewheeling disabled
20- Pwm frequency 1=2kHz / 2=16kHz (1)
21- Pin-16 (brake load) options 0-2 (0)
0= regen. braking = switch on when overvoltage exceed
1= running indication = switch on pin-16 when motor run
2 =as above but also stop input switch on pin-16

Optional resistor :
1.Speed-2 input 250ohm resistor if want to
use 0-20mA speed set signal
2. Fault output 2.2kohm res for pull up
if want to connect for PNP input of PLC
3. Emerg. bias resistor for stop input
for stop input line monitoring in safety
switch installation (need special software)

The input functions in brackets
will be activate with parameter.
speed input - param 5=0
I -lim input - param 6&7= 0
speed input +dir. - param 5= 1

243cbr14 18.09.17

EM-243C-JS1 DC-MOTOR CONTROLLER 12-42V 50A

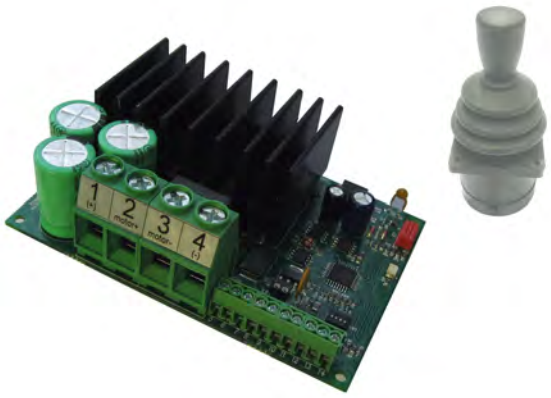

- JS1 is specially for joystick use
- three point calibration
- compact size
- for motor up to 500W
- high current output
- current limit
- overvoltage brake
- own speed ranges for FW and REV.
- rail base mountable
- digital parameter setting
- JS1 program can be update also for standard EM-243A or 243C boards

EM-243C-JS1 is a full bridge DC-motor starter. It is designed for joystick controlled DC-motor applications. The driver has adjustable acceleration and deceleration ramps, which enable the smooth starts and stops. Adjustable current limit protects the motor against overcurrent and it can also be used as an end-stop. This device has also two settable speeds, separate speed ranges for forward and reverse direction. Control input is specially designed for joystick control. The joystick range calibration is done automatically, when calibration function is activated. Calibration detects forward, reverse and midpoint positions. FAULT terminal has simultaneously both input and output functions, the pin is normally high, but is pulled down in overheat and conditionally also in current trip situation.
If FAULT-line is pulled down externally it will cause a stop and prevent it from starting again. For example, it is possible to link fault pins of several units together and achieve a syncronous stop.
There are also special settings as start-kick which can be used in case the device is in danger of being jammed.
Limit input can be individually set for NPN or PNP logic.
The parameter's settings can be done with various EM- interface units. Operation of the controller and some of its functional values can also be monitored with interface units.

TECHNICAL DATA

Supply voltage nominal 12-42V, limits 10-55V
Start up voltage 9V, shutdown voltage 8V
Idle current typ 15mA
Motor current max. with 2kHz pwm
100% pwm 50A ,
20-99pwm% 35A and peak 100A (5s)
Motor current max. with 16kHz pwm
100% pwm 40A ,
20-99pwm% 20A and peak 60A (5s)
Current limit adjustable 1-100A
Notice! current limit is increased 50% at start
Overheat limit 100℃
Start and stop ramp adjustable 0-5s
PWM frequency 2kHz or 16kHz (selectable)
joystick input scale 0-5 or 0-10V (if dip 1 is ON)
Input control logic: high =4-30V, low=0-1V
Control input impedances typ. 10kohm
Control input response time typ 5ms.
Fault out. NPN open coll. max. 50V / 1A
Fault in actives Uin < 1V (NPN)
Motor and supply connectors 4mm
Control connectors 1mm
Dimensions 107x72x40mm
Dimensions in DIN-rail base 110x80x55mm
CE-tested for industrial environment (EMC)
Operating ambient temp (Ta) -40...60℃
Weight 190g

EM-243C BLOCK DIAGRAM

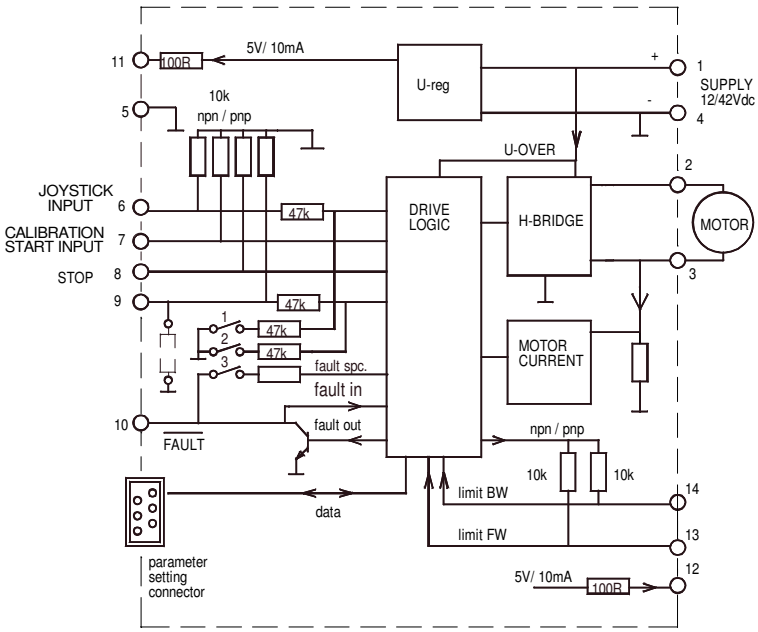

CONNECTIONS

Supply voltage recomendation is 12-42VDC
and ripple should be less than 30% at full load.
Supply voltage limit is 55Vdc
CAUTION ! Wrong polarity can damage the unit.
CAUTION ! Unit doesn't have an internal fuse, so
an external fuse should be added if fuse required.

MONITORABLE VALUES

1/6 Motor current 0-20A (0-200)
2/6 PWM-level-% 0-100% (0-100)
3/6 hour counter (max.65535h)
4/6 start counter (max.65535)
5/6 carry counter for start counter
6/6 joystick position 0-1024

FAULT-LED signal codes

1. power on	one blink
2. current on limit	led is lit
3. current trip	fast blinking...
4. zero-cur trip	long blink- short pause...
5. overvoltage	4 x blink -pause...
6. overheat	short blink- long pause...
7. timeout	3 x blink + long blink...
8. fault input	2 x short + 1x long blink...

Special codes for calibration mode
solid light = calibration can be done
blink light = calibration is done

ADJUST AND SETTINGS (prog ver. EM-243C-JS1 v1.1)

Adjusting and parameter setting of eg.
current limit value, ramp times and speed-2
value can be done with various EM-interface units
EM-236 is basic parameter setting device.
EM-268 and EM- 328 are USB-serial converters,
which makes it possible to set parameters also
with computer where is installed EmenTool Lite
program. EM-326 is Bluetooth -dongle which can
be used in smart devices with the EmenTool App.

DIP SWITCHES

Dip-1 Damping pin 6 if set ON (joystick input)
Dip-2 Damping pin 9 if set ON
Dip-3 NOT in use keep always OFF
Dip-4 NOT in use keep always OFF

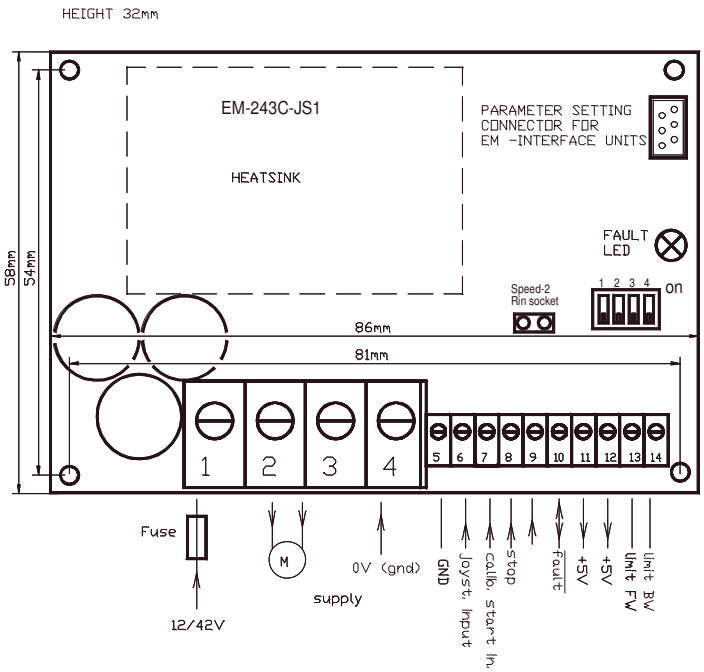

SETTABLE PARAMETERS 20pcs. (defaults in brackets)

1- not in use
2- not in use
3- input logic for limit inputs 1 or 4 PNP/NPN (1)
1= limit inputs PNP 2= limit input NPN
3= limit inputs PNP N.C. 4=limits inputs NPN N.C
(N.C.= normally closed = open circuits stops.)
4- max. speed FW. 0-100% / 0-100 (100)
5- max. speed REV. 0-100% / 0-100 (100)
6- current limit FW. 1-100A / 1-100 (30)
7- current limit REV. 1-100A / 1-100 (30)
8- current trip 0= disabled, 1= enabled : (1)
9- not in use
10- Fault output combinations: 0-2 (0)
0= overtemp, current trip. overvoltage
1= as above + calibration indication
2= current limit indication
NOTICE ! fault input is disabled in setting 2
11- overvoltage limit: 15-60V / 15-60 (55)
Overvoltage can be caused by load driving the motor or
when braking the speed down but supply can not accept
the current back from driver. Exceeding the limit will cause
the power stage set to free-wheel state.
With a direct battery supply the brake current is charging the
battery and the voltage will not normally rise.
There is also 60V fixed dynamic brake point = motor pole shorted
12- load compensation: 0-255 / 0-255 (0)
Load compensation (RxI) improves low speed and start
torgue, but too high compensation achieve unstable running.
Run motor at low speed (30%) Increase compensation
with small steps until motor start behaviour becomes unstable,
then decrease value about 10%
13- timeout: 0-255s. / 0-255 (0=not in use) (0)
14- reset for start and hour-counter 0/1 (0)
selecting 1 and push SAVE => reset counters
15- start ramp: 0-5s / 0-500 (50)
16- stop ramp: 0-5s / 0-500 (20)
17- start-kick 0-200ms / 0-200 (0)
This gives full drive at start and I-lim is 30A
The start kick length is 0-200ms.
18- Dead band wide 0-50% / 0-50 (5)
19- Freewheel options 0-3 (0)
0= no freewheel
1= freewheel when stopped
2= freewheel during stop ramp.
3= freewheel during stop ramp and if stopped
20- Pwm frequency 1=2kHz / 2=16kHz (1)

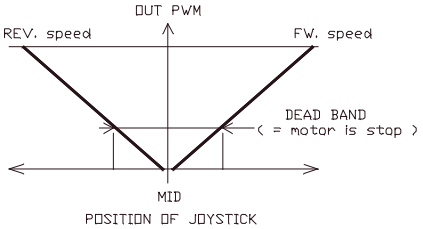

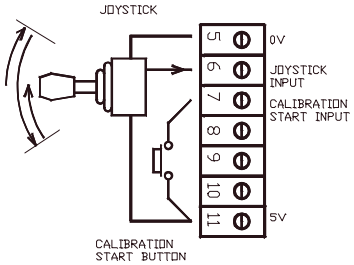

JOYSTICK CALIBRATION

Give about 3s. control signal to CALIB
input. when Fault-led of device will be lit:
-push joystick full forward, then
-pull joystick full reverse, then
-release joystick to mid position, then
-wait until led starts to blink = calibration done

NOTICE ! calibration above defines joystick
full fw, full rev. and mid point positions.
But the max. speed can be set with
parameters 4 and 5

243c_jb11 16.1.17

EM-259A ISOLATED DIMMER 12-24Vdc 4A

NPN or PNP output
mA, V or potentimeter input
Galvanically isolated control
Rail mountable
EMC tested
EM-259A replaces EM-259

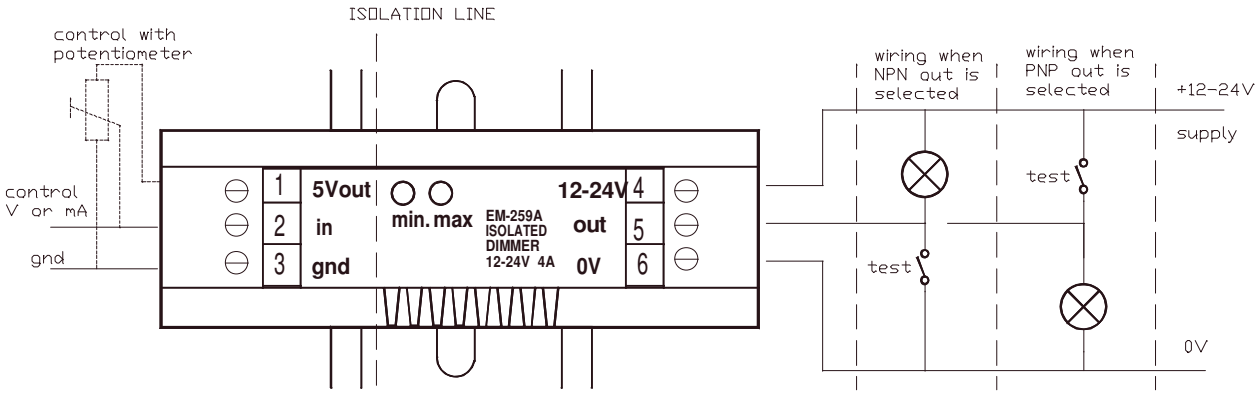

GENERAL

EM-259A is a dimmer for 12-24V system. This device has PNP and NPN outputs, so it can be used either with positive common or negative common systems. The output can source max. 4A current. If this current is exceeded the self-recovery fuse will cut out the output. The load can be resistive or inductive, and there is a special control adjustment curve also for led lamps. The control input is isolated, which makes possible to use this device with external voltage- or mA-signal. Also this device can be controlled with potentiometer. The isolated input makes it easy to connect many of these devices to work in parallel. The settings are made with dip-switches, which are located behind the side cap. The housing is rail mountable. Heat sink is on the side of the box. If load is over 3A, there should be at least 5mm free air on this side of the box to enable the cooling. Device meets the EMC requirements (CE) for household and industry use.

TECHNICAL DATA

Supply voltage	18...35Vdc (cont.)
Current consumption	30mA (quiescent)
Output range	0-100%
Output modes	PNP pull up / NPN pull down
Output current	max. 4A
PWM freq	250Hz
Voltage drop	max 0.5V
Control	0-5V, 0-10V, or 0-24V 0...20mA or 4...20mA or a 1k to 10k potentiometer.
max. adjustment	max. output 100%-50%
bias adjustment	start level 0-50%
Input impedance	100 kohm (for voltage signal) 100 ohm (for current signal)
isolation	500Vdc
operation temp.	0...60℃
Dimensions	79x27x86mm
Housing	rail mountable module (PHOENIX UEGM-25)
Weight	140g

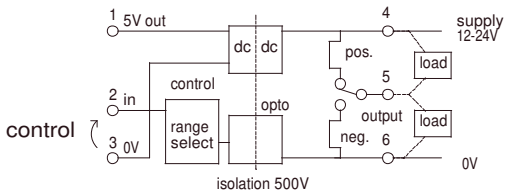

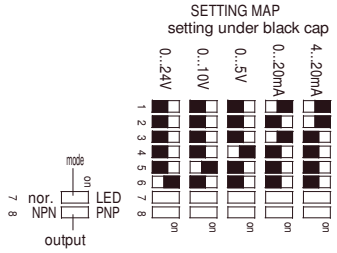

EM-262 230VAC/3A POWER CONTROLLER

FEATURES:

- Triac, phase angle controller
- 50...700W, suitable loads: resistor, fan motor and transformer
- Base level adjustment
- 0...5V, 0...10V or 4...20mA control
- Aux. voltage for potentiometer use
- Galvanic isolation
- Rail base mountable

EM-262 is a triac phase angle controller. The unit works fine with both resistive and inductive loads due to advanced triggering technique. Suitable loads include for example lamps, resistors, fan motors and transformers. Base level adjustment can be used to set the start level 0-40%. This function is useful especially in lighting and fan usage. The control stage is galvanically isolated from power stage, which means the unit is easy to connect to a part of an automation system. The power stage is equipped with a fuse.

TECHNICAL DATA

Supply	190-265Vac
Current consumption	3A max.
Load	50...700W
Control range	0...99%
Base level adjustment	0...40%
Aux. voltage	5Vdc
Aux. v. current	20mA max
Control	0...5V / Rin 100k
	0...10V / Rin 100k
	4-20mA / Rin 180R
Control start	100mV / 4.2mA
Fuse	T4A
Isolation voltage	1500Vrms
Operating temp	-10...50°C
Dimensions	90,60,71mm
Weight	approx. 180g

CAUTION! Do not cover the housing.

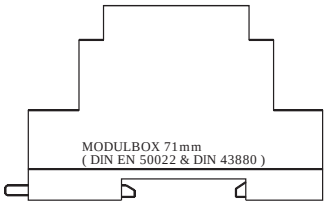

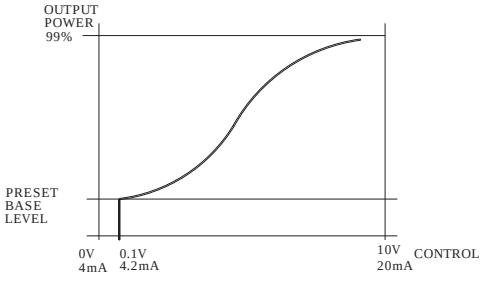

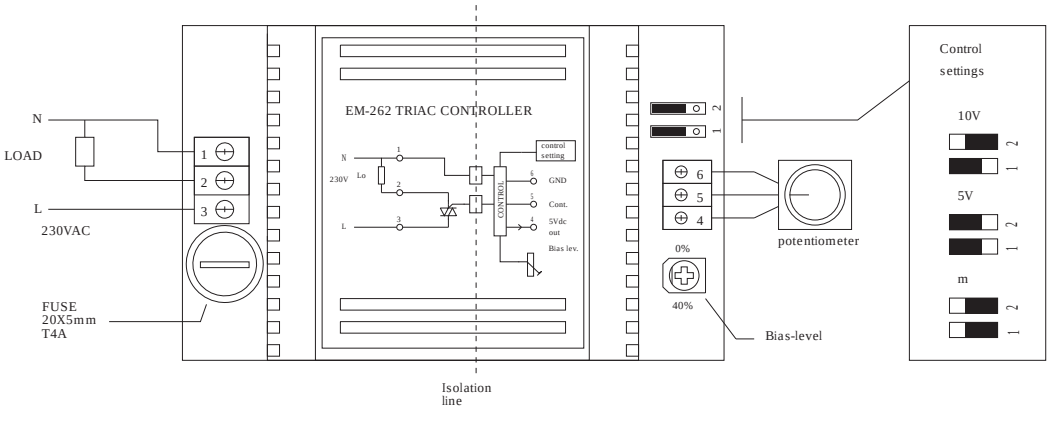

ELECTROMEN Oy Vähäheikkiläntie 56B, 20810 Turku, FINLAND Tel. +358-2-4693050 Fax. +358-2-4693052

EM-269A BRUSHLESS DC-MOTOR DRIVER 12-35V 2A

FEATURES

- Three phase output
- Speed adjustment
- Current limit and trip.
- Open/closed loop modes
- Settable Indication output
- Good efficiency
- Low EMC emissions
- DIN-rail mountable

GENERAL

EM-269A is brushless DC-motor driver for motors with hall sensor feedback. The unit has a mosfet power stage with good efficiency and it meets also todays EMC requirements. The unit has the basic digital command inputs like direction, start/stop, and analog input for speed control. Device has one NPN output for fault and overcurrent indication use. Indication output functions can be defined with parameter. The fault situations are also indicated with on-board LED.

There are two control options for speed. Direct control (open loop) sets motor voltage in propotion to control voltage as with a standard DC-motor. Closed loop mode uses hall sensor feedback for speed control. This mode offers good speed regulation. Start and stop ramps are working in both mode. Speed adjust range, closed loop rpm range and ramps can be set with parameters. Analog input is filtered, so that also PWM signal of PLC can be used to control speed.

Parameter setting can be done digitally with EM-236 interface unit or with Emen-Tool lite PC-programand EM-268 adapter. There is also an option to use iPhone with Ementool-APP and EM-326 adapter. The Parameters settinfg are stored into driver's nonvolatile memory . The parameter interfaces can be also used for motor current monitoring.

Driver card can be installed in DIN-rail base and some enclosure options are also available.

TECHNICAL DATA

Supply voltage 12-24V (11-35Vdc)
Idle current typ. 30mA
Max current 2A cont. (Tamb. 40 °C)
Max current peak 3A (max 5s)
PWM frequency typ. 16kHz
Current limit setting 0.1-3A (step 0.1 A)
Logic level of digital inputs
0-1V or open = "off" / 4-30V = "on"
Input impedance of logic inputs 10k
Response time of digital inputs 2ms
Analog input range 0-5V or 0-10V
Input impedance of analog input 47k
Speed input low pass filter fc. = 40Hz
Speed input pwm freq. recom. > 300Hz
NPN Indication output impedance 1kohm
EMC measured for industrial and household env.
PCB material flammability class UL94V-0
Screw connectors, 1.5mm² (in standard version)
Molex connector 2.5 pitch (option)
Dimensions72x32x18mm
Din-rail option EM-KP72-42
Metal-enclosure option EM-T15
Weight 20g

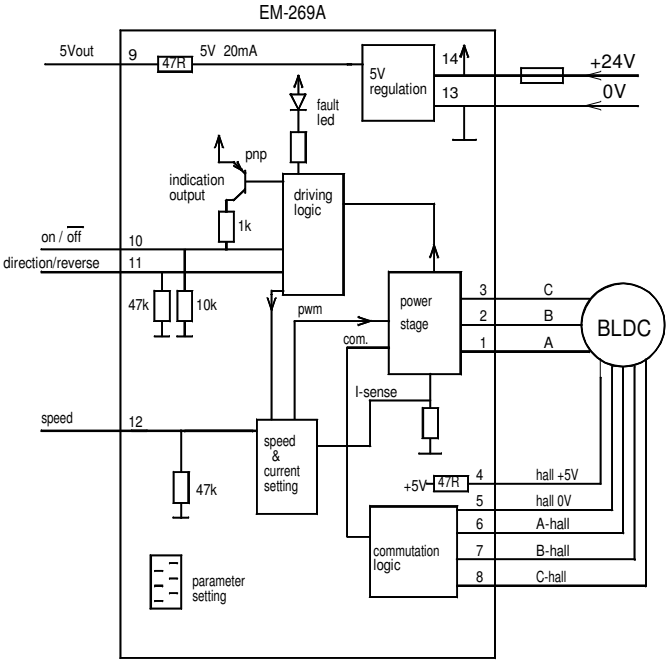

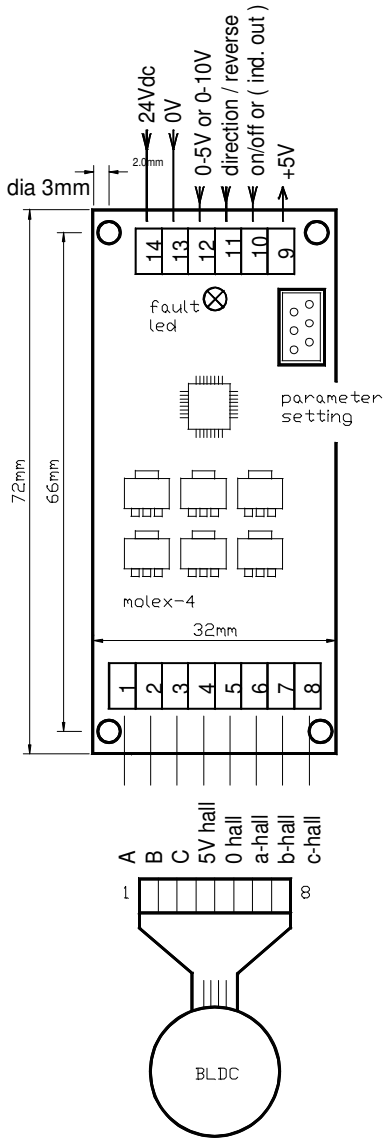

EM-269A WIRING and INTRODUCTION

Supply: filtered 12-35VDC with ripple < 20% with full load.
CAUTION ! reverse polarity can damage the unit
CAUTION ! use an external fuse

Switch off power before connecting motor and power supply to EM-291A unit. Prepare the control circuit. Switch on the unit, connect the interface and set current limit and ramp time according to application.
If motor will not start and takes a lot of current or run unsmooth, check the wiring of the motor and hall-sensors.

In open loop mode motor rpm will drop when loaded, The load compensation parameter can be used to reduce speed dropping in open loop mode.
In Closed loop mode the feedback control try to keep speed a constant (in relation to control voltage) until the current limit is exceeded.

ON/OFF and REV.. inputs can be used with switches or NPN outputs of a logic. Voltage signal greater than 4V is logic "1", maximum input voltage is 30V. ON/OFF input will start up the motor to forward direction. REVERSE input will start up the motor to reverse direction. When motor is already running forward direction, a reverse command will change rotation of direction.
If INDICATION output will be activated, then on/off input are not available, so driver is all time "on". but driver can be stopped with set speed input to zero.

On board fault led indicates overcurrent or current trip.

PARAMETERS SETTINGS (prog. 269A v1.2)

EM-269A parameters set with interface unit EM-236 or with Ementool-Lite and EM-268 or with Ementool-APP and EM-326 (default values in brackets)

1. operating mode
   0 = Open loop / 1 = Closed loop (0)
2. rpm range in closed loop 1000-18000rpm / 1-18 (6)
3. closed loop dynamic 1-5 (3)
   higher value means slower dynamic.
4. Input scale 0 =0-10V / 1= 0-5V
5. load compensation (only open loop use) 0-50 (0)
6. start ramp 0-8 / 0, 0.1, 0.2, 0.3, 0.4, 0.5, 0.7, 1.0, 1.5s (4)
7. stop ramp 0-8 / 0, 0.1, 0.2, 0.3, 0.4, 0.5, 0.7, 1.0, 1.5s (4)
8. current limit 0-3.0A / 0-30 (15)
9. current trip delay 0= trip disabled
   1-200 = 1-200ms delay(40)
10. indication output function (1)
   0 =not in use, 1=current trip, 2= current limit, 3= motor stopped

PARAMETERS DEFINITION

1. Open loop or closed loop selection
2 Closed loop RPM range can be defined with this parameter
   1000 means that motor speed range is 0-1000rpm
3. Closed loop dynamic set the closed loop control response
   higher value means slower response
4 Two selectable basic speed input scale ranges.
5. Load compensation can be needed in open loop use. It gives additive torgue at low rpm. The compensation value depends on motor. Right value can be found next way: Drive motor at low speed in open loop mode. Increase the compensation value for example 5 step at once and try to load motor. You can feel that the motor torgue is increased. Notice too high compensation value will cause nervous behaviour of the motor. Keep the compensation value 0 at closed loop mode.
6 & 7 acceleration and deceleration ramps. these parameters for smoothening the start stop situations. The start ramp also decreases start current spikes.
8.Current limit parameter defines maximum value for current. Driver limits or trips if set value is exceeded. The current is in ratio for motor torque.
9.This parameter sets reaction time for current trip.
   Value 0 disabled current trip action, then current only will be limited to the value set with param 8. The values 1-200ms set how long time current limit has to been exceeded, until driver shut down motor.
10. Disabling or selecting the indication output function.
   Notice, that if setting something else tjan 0, then start/stop input pin is not in use, because out uses same terminal.

MONITOR VALUES

1. trip status
   0= no trip, 1= tripped for FW dir, 2=tripped for REV. dir.
2. Speed input signal value
3. Motor current 0-30 = 0-3.0A

OTHER.

An iPhone access code can be set when EmenTool-APP control is used. This code can be reset with simultaneous REV. and ON/OFF commands at the same time when power switch on.

DC-MOTOR CONTROLLER EM-282C 12-42V 100A

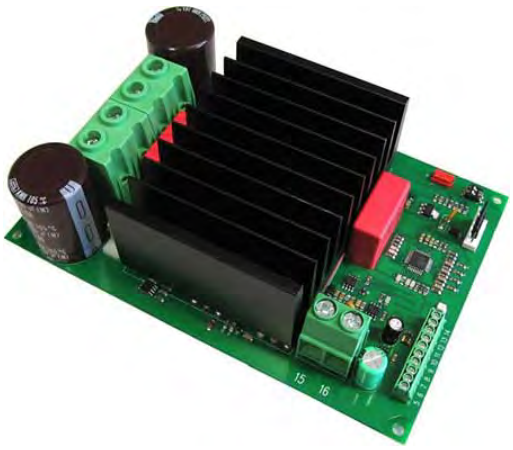

FEATURES

- high current output
- brake load output
- current limit
- current limit for brake also
- zero-current limit
- speed setting/adjustment
- flexible control inputs
- impulse / continuous mode
- rail base mountable
- digital parameter setting
- C versions program
  + 2/16kHz pwm freq. options
  + freewheel options
  + autoreverse option
  + running indication options
  + expanded input logic options
  + thermal cont. Fan-output (pcb v.3)

EM-282 is a full bridge DC-motor starter. It is designed to work with DC-motor (permanent magnet and brushed) in applications where a variety of special functions and settings are needed. Starter has an adjustable acceleration and deceleration ramps enabling the smooth starts and stops. Adjustable current limit protects motor against overcurrent. Current limitation for braking is also available (regeneration). EM-282 has two selectable and settable speeds. This feature can be useful eg. in positioning applications. The FW and BW -inputs control the forward and backward run. STOP input is to stop the motor but there are also available individual limit inputs for FW and BW direction end stops that will cause a motor shut-down. SPEED-2 input activates the presettable speed-2, but it can also be set for use as an analog speed control input (0-5V signal). FAULT terminal operates same time as an input and output. Fault line is internally pulled high (100kohm to Vsupply), but will be pulled down in overheat or conditionally also in current trip situation. If FAULT-line is pulled down externally it will cause a stop and disable a new start. For example it is possible to link FAULT pins of several units together and achieve this way a syncronous stop.

Driving can be done with two selectable control modes, continuous and impulse. In continuous mode the motor runs as long as the command is on. In impulse mode a short command starts the motor, and only a new impulse will change the status. Inputs are divided in to two groups, command and limit -inputs. These groups can be individually set to work with NPN (connect to zero control) or PNP (positive voltage control) -logic. The parameters are set digitally with a hand held EM-236 interface unit. With this unit the same settings (adjustments) can also be easily copied to an other or to multible devices. Operation of the controller and some of its functional values can also be monitored with EM-236 interface unit.

TECHNICAL DATA (prog. EM-282C v1.4 and pcb v.3 or later)

Supply voltage nom. 12-42Vdc (abs. limits 10-50V)
Shutdown voltage 10V
Overvoltage limit adjustable 15-50V
Idle current typ 20mA
Motor current max. continuous 100A (at 25°C amb. temp)
80A (at 60° amb temp) and peak 200A (5s)
Motor currents are about 20% lower if pwm frequency is 16kHz
Braking load current (pin 16) max cont 50A peak 100A
Current limit adjustable 1-200A
NOTICE! current limit is 20% boosted during start ramp.
Over temp. limit 100°C
Start and stop ramp adjustable 0-5s
PWM frequency 2kHz / 16kHz
Speed input scale (speed-2) 0-4.5V = 0-100% pwm
I-lim input scale 0-5V = 0-200A
Input control logic: high =4-30V, low=0-1V
Control input impedances typ. 10kohm
Control input response time typ 5ms.
Fault out. NPN open coll. max 42V / 0.5A
Fault in. actives Uin < 1V (NPN with 100k pull up)
Fan-output switch on 55°C, off 50°C (only pcb v.3 of later)
Fan-output NPN max 40V 100mA
12V Fan (+) max 100mA
Motor and supply connectors 16mm²
Control connectors 1mm²
Dimensions 180x122x60mm
CE-tested for industrial environment (EMC)
Operating ambient temp (Ta) -40...60°C
Weight 750g

EM-282 BLOCK DIAGRAM (board ver. v.3)

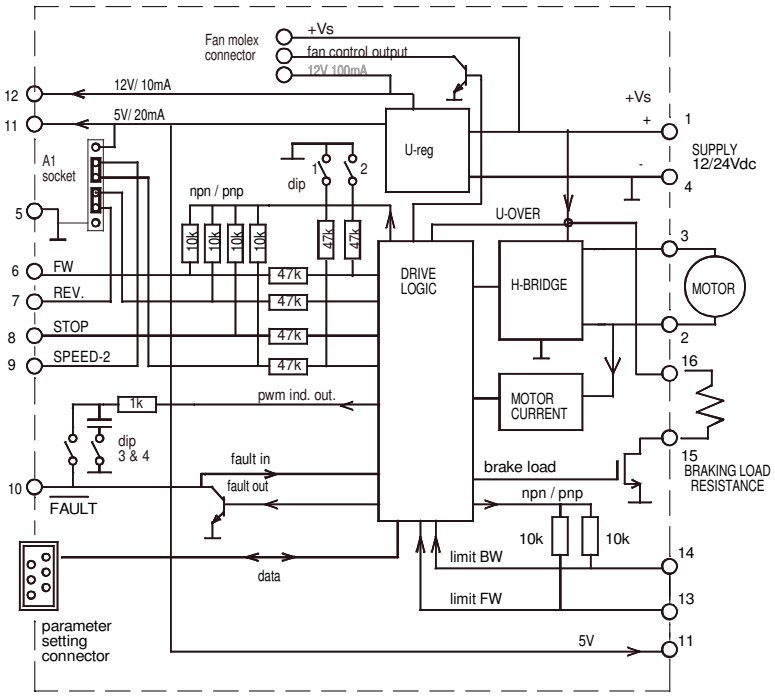

282Cbr14 180917kmk

ELECTROMEN Oy www.electromen.com

CONNECTIONS

Supply voltage must be filtered DC of 12-42V,
and ripple should be less than 20% at full load.
CAUTION ! Wrong polarity can damage the unit.
CAUTION ! Unit doesn't have an internal fuse.
So if required, an external fuse should be added.
NOTICE ! thermal controlled FAN-out only in PCB ver3 or more

ADJUSTMENT AND SETTINGS (prog. EM-282C v.1.3)
Settings can be done with 3 interface device options.
1. EM-236 interface unit
2. EM-328 series interface units with EmenTool Lite PC-software
3. EM-326 interface unit with EmenTool App smartphone application. If using App you can set device-specific access code, which protects device against unauthorized smartphone connections. The access code can be reset with simultaneous FW and BW comand, when power switch on.

SETTABLE PARAMETERS (EM-282C v1.4 defaults in brackets)

1 command mode: continuous = 0, impulse= 1 (0)
2 start condition combinations: 0-3 (1)
0= start both direction after I-trip and Stop
1= start only opposite direction after I-trip
2= start only opposite direction after Stop
3= start only opposite direction after I- and Stop
3 input logic combinations 0-7 PNP/NPN (0)
PNP control with positive signal and input has pull down res.
NPN control with negative signal and input has pull up res.
N.C. = input resistor as above, but control signal is inverted
0= cont. PNP, limits PNP 4=cont. PNP, limits PNP N.C.
1= cont. NPN, limits PNP 5=cont. NPN, limits PNP N.C.
2= cont. PNP, limits NPN N.C. 6=cont. PNP, limits NPN
3= cont. NPN, limits PNP N.C. 7=cont. NPN, limits PNP
4 running speed-1: 0-100% / 0-100 (100)
5 running speed-2: 0-100% / 0-100 (50)
Note: If selected to 0 "speed-2 input" is used as analog 0-5V speed control input.
Note2: If selected to 1 "speed-2 input" is used as analog 0-5V speed control input, and run start automatically and REV. input changes direction
6 current limit : FW 0-200A / 0-200 (30)
7 current limit : BW 0-200A / 0-200 (30)
NOTICE! if both 6 & 7 is set = 0, then I-lim input is active
8 Trip combinations: 0-3 (1)
0= no I-trip, no zero-current-trip
1= only I-trip
2= only zero-current-trip
3= both I-trip and zero-current-trip
9 I-trip delay: 0-255ms / 0-255 (20)
10 Fault output combinations: 0-5 (1)
0= I-trip and zero current won´t cause fault output signal
1= only I-trip causes fault output signal
2= only zero current causes fault output signal
3= both I-trip and zero currenT causes fault output signal.
4 = overcurrent indication
5 = "run" indication = pull down when motor run

FAULT-LED signal codes

1. power on one blink
2. current on limit led is lit
3. current trip fast blinking...
4. zero-cur trip long blink- short pause...
5. over voltage 4 x blink -pause...
6. over heat short blink- long pause...
7. time-out 3 x blink + long blink...
8. fault input 2 x short + 1x long blink...

MONITORABLE VALUES (EM-236 / EmenTool)

1 Motor current 0-200A (0-200)
2 PWM-level-% 0-100% (0-100)
3 hour counter (max.65535h)
4 start counter (max.65535)
5 carry counter for start counter
6 Braking current 0-200A (0-200)

11 overvoltage limit: 15-65V / 15-65 (40)
Overvoltage can be caused by load driving the motor or when braking the speed down but supply can not accept the current back from driver. Exceeding the limit will cause first the brake load switc on and if voltage still rise 10% as limit value the power stage set to free-wheel state.
With a direct battery supply the brake current is charging the battery and the voltage will not normally rise.
12 load compensation: 0-255 / 0-255 (0)
Load compensation (RxI) improves low speed and start torgue, but too high compensation achieve unstable running.
Run motor at low speed (30%) Increace compensation with small steps until motor start behaviour unstable, then decrease value about 10%
13 timeout: 0-255s. / 0-255 (0=not in use) (0)
14 reset for start and hour-counter 0/1 (0)
selecting 1 and push save = reset counters
15 start ramp: 0.2-5s / 0-500 (100)
16 stop ramp: 0.2-5s / 0-500 (100)
17 start kick 0-200ms / 0-200 (0)
gives short 0-200ms full drive pulse for start
18- I-trip auto reversing 0-5s / 0-500 (0)
Change automatically run direction when I-trip occurs the revesing time will select with this parameter
19- Freewheel options 0-5 (0)
0= freewheeling when overvoltage
1= freewheeling when overv. or stopped
2= freewheeling when overv. or during stop ramp
3= freewheeling when overv. or when stopped or during stop ramp
4= freewheeling when stopped
5 =freewheeling disabled
20- Pwm frequency 1=2kHz / 2=16kHz
21- Current limit in braking 5-200A / 5-200 (50)
22- Pin-15 (brake load) options 0-2 (0)
0= regen. braking = switch on when overvoltage exceed
1= running indication = switch on pin-16 when motor run
2 =as above but also stop input switch on pin-16

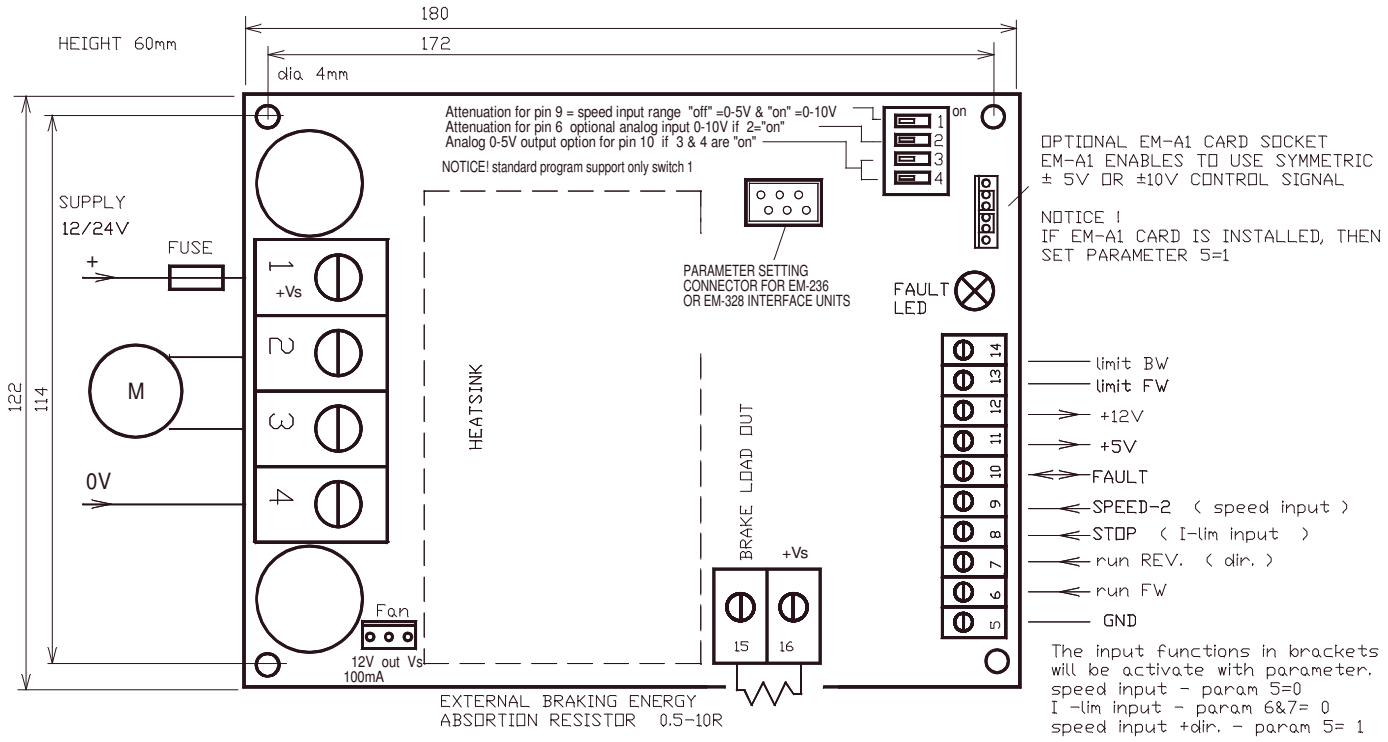

DC-MOTOR CONTROLLER EM-282C-48V 24-48Vdc 80A

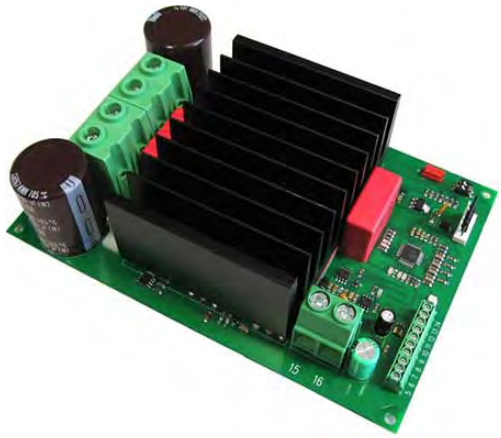

FEATURES

- high current output
- brake load output
- suitable for 48V battery supply
- current limit
- current limit for brake also
- zero-current limit
- speed setting/adjustment
- flexible control inputs
- impulse / continuous mode
- rail base mountable
- digital parameter setting
- C versions program
  + 2/16kHz pwm freq. options
  + freewheel options
  + autoreverse option
  + running indication options
  + expanded input logic options
  + thermal cont. Fan-output (pcb v.3)

EM-282 is a full bridge DC-motor starter. It is designed to work with DC-motor (permanent magnet and brushed) in applications where a variety of special functions and settings are needed. Starter has an adjustable acceleration and deceleration ramps enabling the smooth starts and stops. Adjustable current limit protects motor against overcurrent. Current limitation for braking is also available (regeneration). EM-282 has two selectable and settable speeds. This feature can be useful eg. in positioning applications. The FW and BW -inputs control the forward and backward run. STOP input is to stop the motor but there are also available individual limit inputs for FW and BW direction end stops that will cause a motor shut-down. SPEED-2 input activates the presettable speed-2, but it can also be set for use as an analog speed control input (0-5V signal). FAULT terminal operates same time as an input and output. Fault line is internally pulled high (100kohm to Vsupply), but will be pulled down in overheat or conditionally also in current trip situation. If FAULT-line is pulled down externally it will cause a stop and disable a new start. For example it is possible to link FAULT pins of several units together and achieve this way a syncronous stop.

Driving can be done with two selectable control modes, continuous and impulse. In continuous mode the motor runs as long as the command is on. In impulse mode a short command starts the motor, and only a new impulse will change the status. Inputs are divided in to two groups, command and limit -inputs. These groups can be individually set to work with NPN (connect to zero control) or PNP (positive voltage control) -logic. The parameters are set digitally with a hand held EM-236 interface unit. With this unit the same settings (adjustments) can also be easily copied to an other or to multible devices. Operation of the controller and some of its functional values can also be monitored with EM-236 interface unit.

TECHNICAL DATA (prog. EM-282-48V prog v1.4 and pcb v.3 or later)

Supply voltage nom. 24-48Vdc (abs. limits 20-60V)
Shutdown voltage 20V
Overvoltage limit adjustable 20-65V
Idle current typ 20mA
Motor current max. continuous 80A (at 25°C amb. temp)
70A (at 50° amb temp) and peak 160A (5s)
Motor currents are about 20% lower if pwm frequency is 16kHz
Braking load current (pin 16) max cont 30A peak 100A
Current limit adjustable 1-200A
NOTICE current limit is 20% boosted during start ramp
Over temp. limit 100°C
Start and stop ramp adjustable 0-5s
PWM frequency 2kHz / 16kHz
Speed input scale (speed-2) 0-4.5V = 0-100% pwm
I-lim input scale 0-5V = 0-200A
Input control logic: high =4-30V, low=0-1V
Control input impedances typ. 10kohm
Control input response time typ 5ms.
Fault out. NPN open coll. max 42V / 0.5A
Fault in. actives Uin < 1V (NPN with 100k pull up)
Fan-output switch on 55°C, off 50°C (only pcb v.3 of later)
Fan-output NPN max 40V 100mA
12V Fan (+) max 100mA
Motor and supply connectors 16mm²
Control connectors 1mm²
Dimensions 180x122x60mm
CE-tested for industrial environment (EMC)
Operating ambient temp (Ta) -40...60°C
Weight 750g

EM-282 BLOCK DIAGRAM (board ver. v.3)

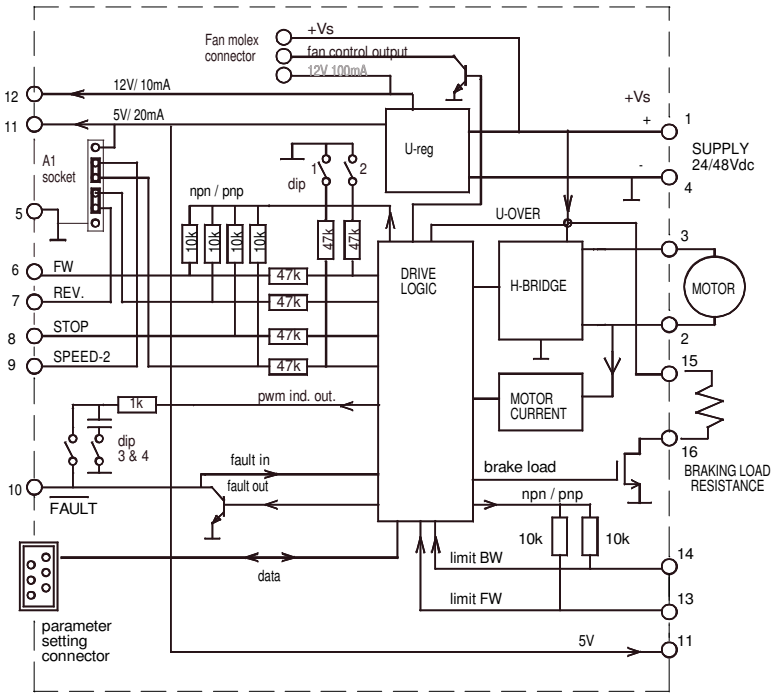

ELECTROMEN Oy www.electromen.com

282C4814 190917kmk

CONNECTIONS

Supply voltage must be filtered DC of 24-60V,
and ripple should be less than 20% at full load.
CAUTION ! Wrong polarity can damage the unit.
CAUTION ! Unit doesn't have an internal fuse.
So if required, an external fuse should be added.
NOTICE ! thermal controlled FAN-out only in PCB ver3 or more

ADJUSTMENT AND SETTINGS (prog. EM-282C v.1.3)
Settings can be done with 3 interface device options.
1. EM-236 interface unit
2. EM-328 series interface units with EmenTool Lite PC-software
3. EM-326 interface unit with EmenTool App smartphone application. If using App you can set device-specific access code, which protects device against unauthorized smartphone connections. The access code can be reset with simultaneous FW and BW comand, when power switch on.

SETTABLE PARAMETERS (EM-282C v1.4 defaults in brackets)

1 command mode: continuous = 0, impulse= 1 (0)
2 start condition combinations: 0-3 (1)
0= start both direction after I-trip and Stop
1= start only opposite direction after I-trip
2= start only opposite direction after Stop
3= start only opposite direction after I- and Stop
3 input logic combinations 0-7 PNP/NPN (0)
PNP control with positive signal and input has pull down res.
NPN control with negative signal and input has pull up res.
N.C. = input resistor as above, but control signal is inverted
0= cont. PNP, limits PNP 4=cont. PNP, limits PNP N.C.
1= cont. NPN, limits PNP 5=cont. NPN, limits PNP N.C.
2= cont. PNP, limits NPN N.C. 6=cont. PNP, limits NPN
3= cont. NPN, limits NPN N.C. 7=cont. NPN, limits NPN
4 running speed-1: 0-100% / 0-100 (100)
5 running speed-2: 0-100% / 0-100 (50)
Note: If selected to 0 "speed-2 input" is used as analog 0-5V speed control input.
Note2: If selected to 1 "speed-2 input" is used as analog 0-5V speed control input, and run start automatically and REV. input changes direction
6 current limit : FW 0-200A / 0-200 (30)
7 current limit : BW 0-200A / 0-200 (30)
NOTICE! if both 6 & 7 is set = 0, then I-lim input is active
8 Trip combinations: 0-3 (1)
0= no I-trip, no zero-current-trip
1= only I-trip
2= only zero-current-trip
3= both I-trip and zero-current-trip
9 I-trip delay: 0-255ms / 0-255 (20)
10 Fault output combinations: 0-5 (1)
0= I-trip and zero current won´t cause fault output signal
1= only I-trip causes fault output signal
2= only zero current causes fault output signal
3= both I-trip and zero currenT causes fault output signal.
4 = overcurrent indication
5 = "run" indication = pull down when motor run

FAULT-LED signal codes

1. power on one blink
2. current on limit led is lit
3. current trip fast blinking...
4. zero-cur trip long blink- short pause...
5. over voltage 4 x blink -pause...
6. over heat short blink- long pause...
7. time-out 3 x blink + long blink...
8. fault input 2 x short + 1x long blink...

MONITORABLE VALUES (EM-236 / EmenTool)

1 Motor current 0-200A (0-200)
2 PWM-level-% 0-100% (0-100)
3 hour counter (max.65535h)
4 start counter (max.65535)
5 carry counter for start counter
6 Braking current 0-200A (0-200)

11 overvoltage limit: 20-65V / 20-65 (60)
Overvoltage can be caused by load driving the motor or when braking the speed down but supply can not accept the current back from driver. Exceeding the limit will cause first the brake load switc on and if voltage still rise 10% as limit value the power stage set to free-wheel state.
With a direct battery supply the brake current is charging the battery and the voltage will not normally rise.
12 load compensation: 0-255 / 0-255 (0)
Load compensation (RxI) improves low speed and start torgue, but too high compensation achieve unstable running.
Run motor at low speed (30%) Increace compensation with small steps until motor start behaviour unstable, then decrease value about 10%
13 timeout: 0-255s. / 0-255 (0=not in use) (0)
14 reset for start and hour-counter 0/1 (0)
selecting 1 and push save = reset counters
15 start ramp: 0.2-5s / 0-500 (100)
16 stop ramp: 0.2-5s / 0-500 (100)
17 start kick 0-200ms / 0-200 (0)
gives short 0-200ms full drive pulse for start
18- I-trip auto reversing 0-5s / 0-500 (0)
Change automatically run direction when I-trip occurs the revesing time will select with this parameter
19- Freewheel options 0-5 (0)
0= freewheeling when overvoltage
1= freewheeling when overv. or stopped
2= freewheeling when overv. or during stop ramp
3= freewheeling when overv. or when stopped or during stop ramp
4= freewheeling when stopped
5 =freewheeling disabled
20- Pwm frequency 1=2kHz / 2=16kHz
21- Current limit in braking 5-200A / 5-200 (50)
22- Pin-16 (brake load) options 0-2 (0)
0= regen. braking = switch on when overvoltage exceed
1= running indication = switch on pin-16 when motor run
2 =as above but also stop input switch on pin-16

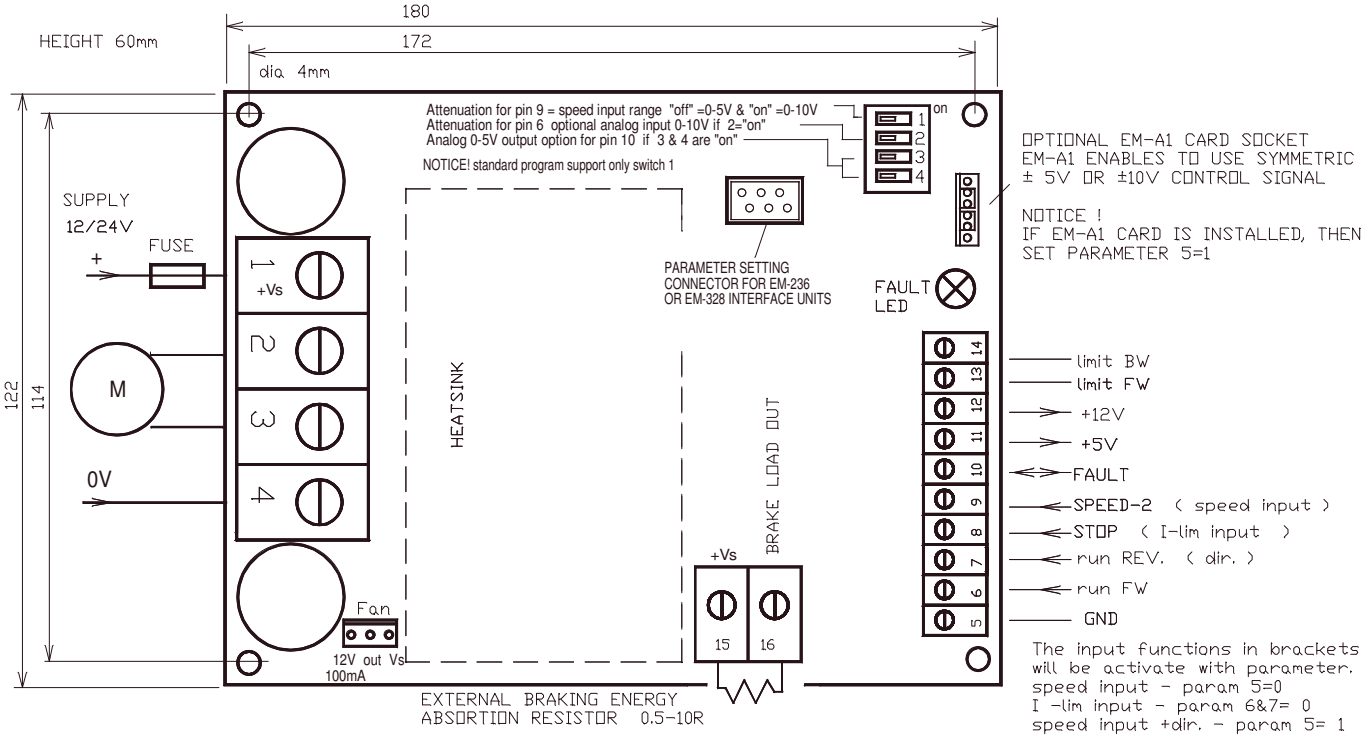

EM-282C-JS1 DC-MOTOR CONTROLLER 12-42V 100A

- JS1 is specially for joystick use
- three point calibration
- small size
- high current output
- current limit
- for motors up to 100W
- overvoltage brake
- own speed ranges for FW and REV.
- rail base mountable
- digital parameter setting
- JS1 program can be update also for standard EM-282 board

EM-282-JS1 is a full bridge DC-motor starter. It is designed for joystick controlled DC-motor applications. The driver has adjustable acceleration and deceleration ramps, which enable the smooth starts and stops. Adjustable current limit protects the motor against overcurrent and it can also be used as an end-stop. This device has also two settable speeds, separate speed ranges for forward and reverse direction. Control input is specially designed for joystick control. The joystick range calibration is done automatically, when calibration function is activated. Calibration detects forward, reverse and midpoint positions. FAULT terminal has simultaneously both input and output functions, the pin is normally high, but is pulled down in overheat and conditionally also in current trip situation.
If FAULT-line is pulled down externally it will cause a stop and prevent it from starting again. For example, it is possible to link fault pins of several units together and achieve a syncronous stop.
There are also special settings as start-kick which can be used in case the device is in danger of being jammed.
Limit input can be individually set for NPN or PNP logic.
The parameter's settings can be done with various EM- interface units. Operation of the controller and some of its functional values can also be monitored with interface units.

TECHNICAL DATA

Supply voltage nominal 12-42V, limits 10-55V
Start up voltage 11V, shutdown voltage 10V
Idle current typ 20mA
Motor current max. with 2 & 16 kHzpwm
100% pwm 100A , (at Tamb <40°C)
Motor current with 2 kHz pwm,
20-99pwm% 75A and
Motor with 16kHz pwm
20-99pwm% 60A
Motor current peak 200A (5s.)
Current limit adjustable 1-200A
Notice! current limit is increased 25% at start
Braking load current (pin 16) max cont 50A peak 100A
Overheat limit 100°C
Start and stop ramp adjustable 0-5s
PWM frequency 2kHz or 16kHz (selectable)
joystick input scale 0-5 or 0-10V (if dip 1 is ON)
Input control logic: high =4-30V, low=0-1V
Control input impedances typ. 10kohm
Control input response time typ 5ms.
Fault out. NPN open coll. max 42V / 0.5A
Fault in. actives Uin < 1V (NPN with 100k pull up)
Motor and supply connectors 16mm²
Control connectors 1mm²
Dimensions 180x122x60mm
CE-tested for industrial environment (EMC)
Operating ambient temp (Ta) -40...60°C
Weight 750g

EM-282C-js1 BLOCK DIAGRAM

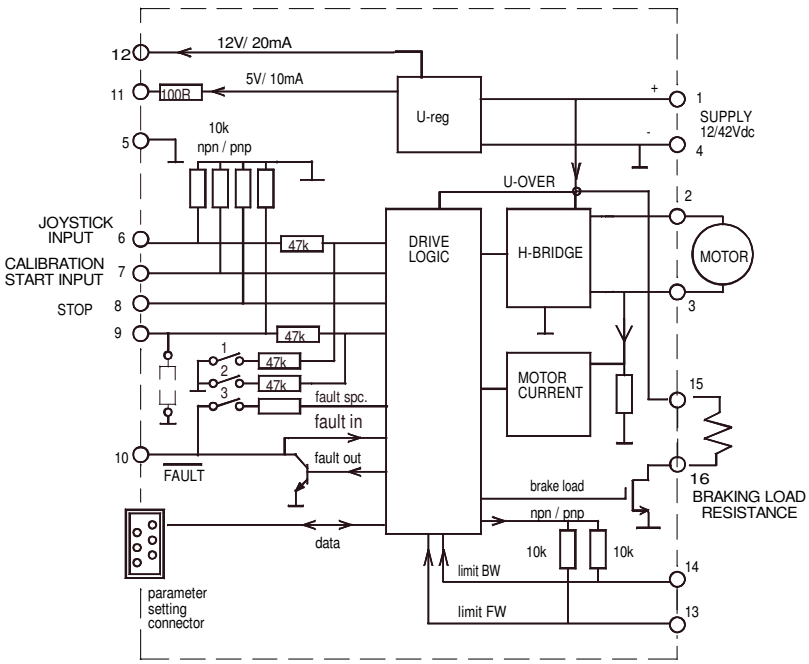

ELECTROMEN Oy www.electromen.com

CONNECTIONS

Supply voltage recomendation is 12-42VDC
and ripple should be less than 30% at full load.
Supply voltage limit is 55Vdc
CAUTION ! Wrong polarity can damage the unit.
CAUTION ! Unit doesn't have an internal fuse, so
an external fuse should be added if fuse required.

MONITORABLE VALUES

1/6 Motor current 0-20A (0-200)
2/6 PWM-level-% 0-100% (0-100)
3/6 hour counter (max.65535h)
4/6 start counter (max.65535)
5/6 carry counter for start counter
6/6 joystick position 0-1024

FAULT-LED signal codes

1. power on	one blink
2. current on limit	led is lit
3. current trip	fast blinking...
4. zero-cur trip	long blink- short pause...
5. overvoltage	4 x blink -pause...
6. overheat	short blink- long pause...
7. timeout	3 x blink + long blink...
8. fault input	2 x short + 1x long blink...

Special codes for calibration mode
solid light = calibration can be done
blink light = calibration is done

ADJUST AND SETTINGS (prog ver. EM-282C-JS1 v1.2)

Adjusting and parameter setting of eg.
current limit value, ramp times and speed-2
value can be done with various EM-interface units
EM-236 is basic parameter setting device.
EM-268 and EM- 328 are USB-serial converters,
which makes it possible to set parameters also
with computer where is installed EmenTool Lite
program. EM-326 is Bluetooth -dongle which can
be used in smart devices with the EmenTool App.

DIP SWITCHES

Dip-1 Damping pin 6 if set ON (joystick input)
Dip-2 Damping pin 9 if set ON

SETTABLE PARAMETERS 20pcs. (prog. EM-282C-js1 v1.2)
(defaults in brackets)

1- not in use
2- not in use
3- input logic for limit inputs 1-4 PNP/NPN (1)
1= limit inputs PNP 2= limit input NPN
3= limit inputs PNP N.C. 4=limit inputs NPN N.C.
(N.C. = normally closed = open circuit stops)
4- max. speed FW. 0-100% / 0-100 (100)
5- max. speed REV. 0-100% / 0-100 (100)
6- current limit FW. 1-200A / 1-200 (30)
7- current limit REV. 1-200A / 1-200 (30)
8- current trip 0= disabled, 1= enabled : (1)
9- Brake output pin 16 options 0-1 (0)
0 =overvoltage, 1= "run" indication
10- Fault output pin 10 combinations: 0-3 (0)
0= overtemp, current trip. overvoltage
1= as above + calibration indication
2= current limit indication
3= "run" indication
NOTICE ! fault input is disabled in settings 2 and 3

11- overvoltage limit: 15-60V / 15-60 (55)
Overvoltage can be caused by load driving the motor or
when braking the speed down but supply can not accept
the current back from driver. Exceeding the limit will cause
the power stage set to free-wheel state.
With a direct battery supply the brake current is charging the
battery and the voltage will not normally rise.
There is also 60V fixed dynamic brake point = motor pole shorted
12- load compensation: 0-255 / 0-255 (0)
Load compensation (RxI) improves low speed and start
torgue, but too high compensation achieve unstable running.
Run motor at low speed (30%) Increase compensation
with small steps until motor start behaviour becomes unstable,
then decrease value about 10%
13- timeout: 0-255s. / 0-255 (0=not in use) (0)
14- reset for start and hour-counter 0/1 (0)
selecting 1 and push SAVE => reset counters
15- start ramp: 0-5s / 0-500 (50)
16- stop ramp: 0-5s / 0-500 (20)
17- start-kick 0-200ms / 0-200 (0)
This gives full drive at start and I-lim is 30A
The start kick length is 0-200ms.
18- Dead band 0-50% / 0-50 (5)
19- Freewheel options 0-3 (0)
0= no freewheel
1= freewheel when stopped
2= freewheel during stop ramp.
3= freewheel during stop ramp and if stopped
20- Pwm frequency 1=2kHz / 2=16kHz (2)
21- Braking current limit 5-200A / 5-200 (50)

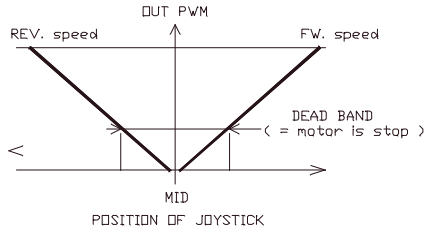

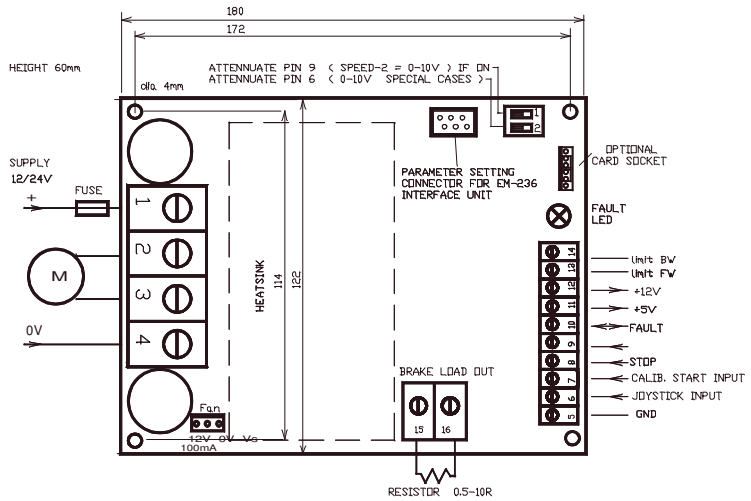

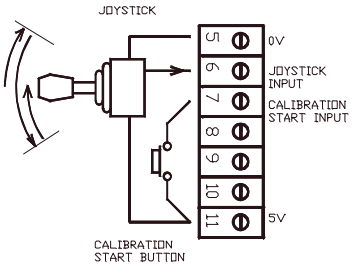

JOYSTICK CALIBRATION

Give about 3s. control signal to CALIB
input. when Fault-led of device will be lit:
-push joystick full forward, then
-pull joystick full reverse, then
-release joystick to mid position, then
-wait until led starts to blink = calibration done

NOTICE ! calibration above defines joystick
full fw, full rev. and mid point positions.
But the max. speed can be set with
parameters 4 and 5

EM-285 DC-MOTOR SPEED REGULATOR 12 / 24V 20A

FEATURES

- Speed cont. to 1-direction
- Panel mountable
- Small size
- Motor size 30-200W
- Good speed regulation
- Load comp. adjustable RxI
- Adjustable current limit
- Overheating protection
- EMC tested.

EM-285 is a PWM-based DC-motor driver. The materials and features meet the industrial standards. Motor voltage is regulated against supply voltage changes, and there is also a load compensation adjustment (RxI), which enables steady speed during motor loading. Because of these features EM-285 can offer a good DC-motor speed regulation. In the power line of EM-285 there is an overvoltage limit, which trips the power stage in case the voltage would try to rise too high. This is possible in deceleration situation (emf voltage generation in braking).
If potentiometer is turned on zero-position, the driver will make a shorting on motor wires for 5s. This creates a powerfull braking (dynamic brake) which can be used to stop or lower the motor speed fast.
The current limit and potentiometer range can be adjusted with on-board trimmer potentiometer.
The device is EMC measured and meets industrial requirements in typical installation. EM-285 is easy to mount to a D10mm hole in the assembly panel. The power stage is not short circuit protected, so it is recommended to use an external fuse in application supply wiring.

TECHNICAL DATA

Supply voltage 10-35Vdc
Overvoltage shut down 38V
Undervoltage shut down 10V
Start up voltage 11V
Idle current typ. 20mA
Motor current cont. max 20A (Ta<50℃)
Motor current peak max 30A (10s.)
Power losses 5W (at 20A and 16kHz)
Power losses 4W (at 20A and 2kHz)
Current limit adj. 1-30A
PWM frequency 2kHz or 16kHz
Temperature limit 90℃
Motor and supply connectors 2.5mm
EMC EN 50081-2 & EN 50082-2
Weight 85g
Operating temp (Ta) -20...60℃

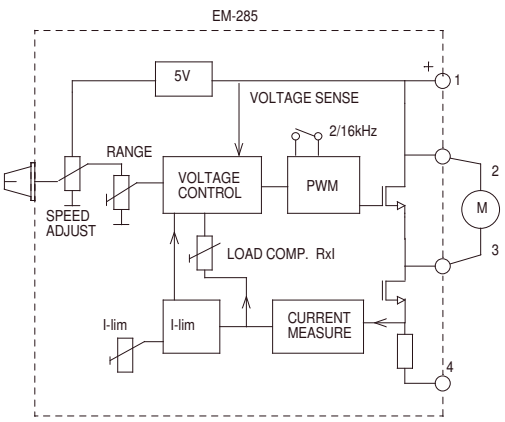

ELECTROMEN Oy
www.electromen.com

EM-285 WIRING and INSTALLATION

Recommended supply voltage 12-32Vdc filtered DC
Ripple should be less than 20% at max. power.
At high power use the supply wires should be as short as possible. The use of external fuse is recommended.
ATT. Wrong supply polarity can damage device.
ATT. Driver has no inbuilt fuse.

Select operation frequency. At 2kHz there are lower power losses and lower EMC emission level, but some cases there can occur audiable noise.

Range trim is used to scale the usable speed adjust range. See diagram below.

Current limit (I-lim) limits the motor current, in other words the motor torgue. This adjustment should be used to set the limit to suitable level according to the application.

This device can be installed using one 10mm diameter hole. If the enviroment has high vibration level, the fastening can be secured with two external 3mm screws.

The body of this device can warm up, specially when continuos current is higher than 15A. Take this account when installing device in to plastic enclosure. In high power application the metal box is recommended.
Metal box also offers a better EMC properties and cooling.
The body temperature rise from ambient at 20A current is 45℃ at pwm-freq. of 16kHz and 35℃ at pwm-freq of 2kHz

Load compensation (RxI) should be set to minimum in beginning. Next set the a motor rpm 20-30%. and slowly increase compensation and simultanously try loading the motor. If motor rpm is no affected by loading the compensation adjustment is in optimum. But if motor starts to twitch or running turns nervous the adjustment is overcompensating.

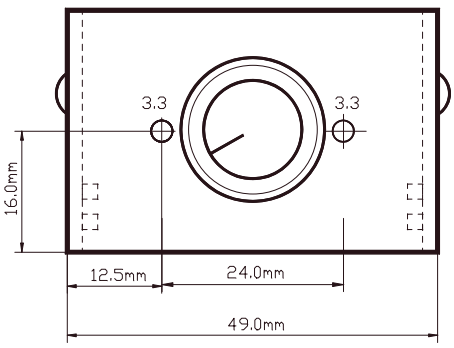

RxI compensation adjustment

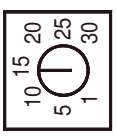

I-lim./ A current limit

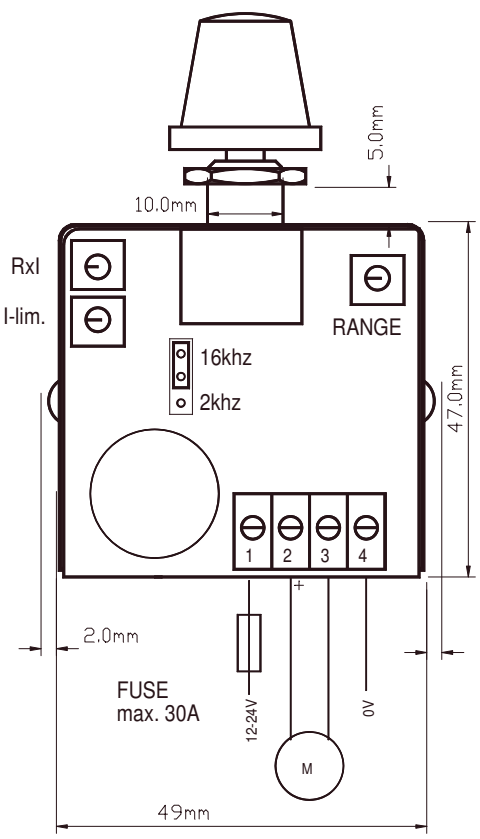

Motor voltage vs. potentiometer position

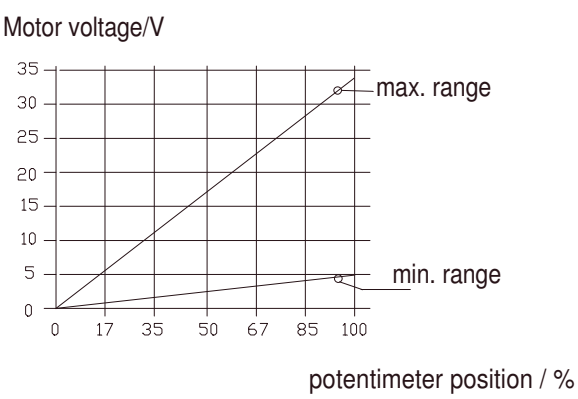

Range is adjustable with inbuilt range trim

0% = potentiometer full counter clockwise
100% = potentiometer full clockwise

EM-291A BRUSHLESS DC-MOTOR DRIVER 12-35V 4A

FEATURES

- Three phase output
- Speed adjustment
- Current limit and trip.
- Open/closed loop modes
- Settable Indication output
- Good efficiency
- Low EMC emissions
- DIN-rail mountable

GENERAL

EM-291A is brushless DC-motor driver for motors with hall sensor feedback. The unit has a mosfet power stage with good efficiency and it meets also todays EMC requirements. The unit has the basic digital command inputs like direction, start/stop, and analog input for speed control. Device has one NPN output for fault and overcurrent indication use. Indication output functions can be defined with parameter. The fault situations are also indicated with on-board LED.

There are two control options for speed. Direct control (open loop) sets motor voltage in propotion to control voltage as with a standard DC-motor. Closed loop mode uses hall sensor feedback for speed control. This mode offers good speed regulation. Start and stop ramps are working in both mode. Speed adjust range, closed loop rpm range and ramps can be set with parameters. Analog input is filtered, so that also PWM signal of PLC can be used to control speed.

Parameter setting can be done digitally with EM-236 interface unit or with Emen-Tool lite PC-programand EM-268 adapter. There is also an option to use iPhone with Ementool-APP and EM-326 adapter. The Parameters settinfg are stored into driver's nonvolatile memory . The parameter interfaces can be also used for motor current monitoring.

Driver card can be installed in DIN-rail base and some enclosure options are also available.

TECHNICAL DATA

Supply voltage 12-24V (11-35Vdc)
Idle current typ. 30mA
Max current 4A cont. (Tamb. 40 °C)
Max current peak 6A (max 5s)
PWM frequency typ. 16kHz
Current limit setting 0.1-6A (step 0.1 A)
Logic level of digital inputs
0-1V or open = "off" / 4-30V = "on"
Logic level of disable input
0-1V or open =disabled / 4-30V =on duty
Input impedance of logic inputs 10k
Response time of digital inputs 2ms
Analog input range 0-5V or 0-10V
Input impedance of analog input 47k
Speed input low pass filter fc. = 40Hz
Speed input pwm freq. recom. > 300Hz
NPN Indication output impedance 100ohm
EMC measured for industrial and household env.
PCB material flammability class UL94V-0
Screw connectors, max 2.5mm² cable
Dimensions72x65x20mm
Din-rail option EM-KP72-65
Metal-enclosure option EM-T17
Weight 78g

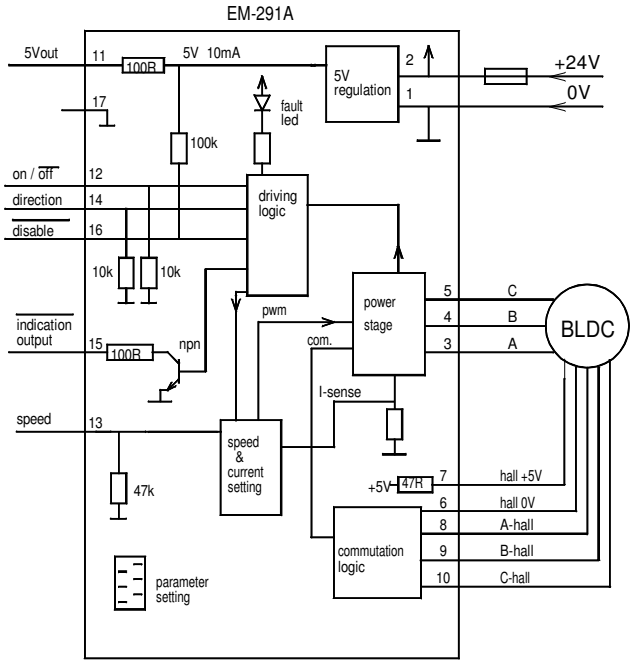

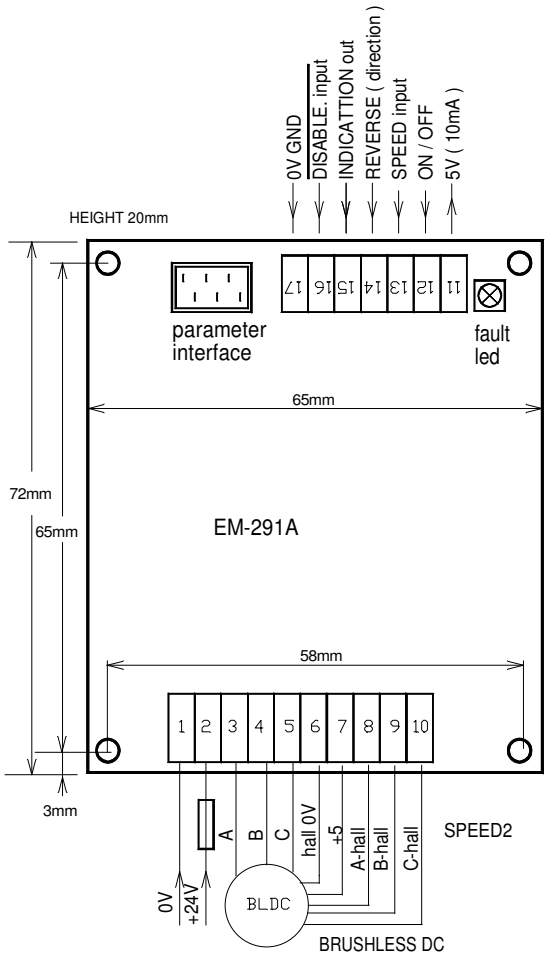

EM-291A WIRING and INTRODUCTION

Supply: filtered 12-35VDC with ripple < 20% with full load.
CAUTION ! reverse polarity can damage the unit
CAUTION ! use an external fuse

Switch off power before connecting motor and power supply to EM-291A unit. Prepare the control circuit. Switch on the unit, connect the interface and set current limit and ramp time according to application.
If motor will not start and takes a lot of current or run unsmooth, check the wiring of the motor and hall-sensors.

In open loop mode motor rpm will drop when loaded, The load compensation parameter can be used to reduce speed dropping in open loop mode.
In Closed loop mode the feedback control try to keep speed a constant (in relation to control voltage) until the current limit is exceeded.

ON/OFF and REV.. inputs can be used with switches or NPN outputs of a logic. Voltage signal greater than 4V is logic "1", maximum input voltage is 30V. ON/OFF input will start up the motor to forward direction. REVERSE input will start up the motor to reverse direction. When motor is already running forward direction, a reverse command will change rotation of direction.
The disable input releases power stage, so motor will run freely. When disable is removed the motor will start with ramp. Notice, the disable input works with negative logic.

On board fault led indicates overcurrent or current trip.

PARAMETERS SETTINGS (prog. 291A v1.2)

EM-291A parameters set with interface unit EM-236 or with Ementool-Lite and EM-268 or with Ementool-APP and EM-326 (default values in brackets)

1. operating mode
   0 = Open loop / 1 = Closed loop (0)
2. rpm range in closed loop 1000-18000rpm / 1-18 (6)
3. closed loop dynamic 1-5 (3)
   higher value means slower dynamic.
4. Input scale 0 =0-10V / 1= 0-5V
5. load compensation (only open loop use) 0-50 (0)
6. start ramp 0-8 / 0, 0.1, 0.2, 0.3, 0.4, 0.5, 0.7, 1.0, 1.5s (4)
7. stop ramp 0-8 / 0, 0.1, 0.2, 0.3, 0.4, 0.5, 0.7, 1.0, 1.5s (4)
8. current limit 0-6A / 0-60 (15)
9. current trip delay 0= trip disabled
   1-200 = 1-200ms delay(40)
10. indication output function (1)
   0 =not in use, 1=current trip, 2= current limit, 3= motor stopped

PARAMETERS DEFINITION

1. Open loop or closed loop selection
2 Closed loop RPM range can be defined with this parameter
   1000 means that motor speed range is 0-1000rpm
3. Closed loop dynamic set the closed loop control response
   higher value means slower response
4 Two selectable basic speed input scale ranges.
5. Load compensation can be needed in open loop use. It gives additive torgue at low rpm. The compensation value depends on motor. Right value can be found next way: Drive motor at low speed in open loop mode. Increase the compensation value for example 5 step at once and try to load motor. You can feel that the motor torgue is increased. Notice too high compensation value will cause nervous behaviour of the motor. Keep the compensation value 0 at closed loop mode.
6 & 7 acceleration and deceleration ramps. these parameters for smoothening the start stop situations. The start ramp also decreases start current spikes.
8.Current limit parameter defines maximum value for current. Driver limits or trips if set value is exceeded. The current is in ratio for motor torque.
9.This parameter sets reaction time for current trip.
   Value 0 disabled current trip action, then current only will be limited to the value set with param 8. The values 1-200ms set how long time current limit has to been exceeded, until driver shut down motor.
10. Disabling or selecting the indication output function.

MONITOR VALUES

1. trip status
   0= no trip, 1= tripped for FW dir, 2=tripped for REV. dir.
2. Speed input signal value
3. Motor current 0-30 = 0-3.0A

OTHER.

An iPhone access code can be set when EmenTool-APP control is used. This code can be reset with simultaneous REV. and ON/OFF commands at the same time when power switch on.

EM-314 STEPPER MOTOR DRIVER 6A 12-24V microstepping and presettable function inputs

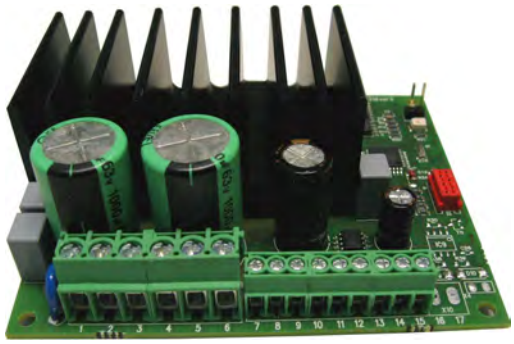

FEATURES

- Bibolar chopper
- 1, 1/2 , 1/4.....1/64 steps
- Four preset function inputs
- PNP or TTL control
- Quiet run current control
- Acceleration / deceleration ramps
- DIN-rail base mountable

EM-314 is a bipolar-chopper type microstepping steppermotor controller. The bipolar operation principle suits most stepper motors and provides the best torque. The microstepping function also enables great performance at low rpm. The stepping and current regulation has been synchronized, giving a smooth and quiet operation. There are 7 different stepping options to choose from, ranging from full- to 1/64-step operation. This provides various possibilities for different speed applications.

The controller has its own auxiliary oscillator, which can be used for pre-set speed driving. The pre-set speeds can be activated by using 4 digital function inputs. The oscillator features an acceleration ramp function, which allows frequencies to be altered flexibly. The motor will also start up reliably even to higher frequencies and it is possible to shift to the desired velocity with out pace drop. The auxiliary oscillator incorporates an indexing part, which offers the possibility of running presettable operational sequences. These secuences can be activated with the 4 digital inputs. The sequence is a movement with selected speed, direction and distance (as steps). All the inputs are activated with positive logic commands. So the commands and functions are activated by connecting the input to a positive voltage. Control can also be done with TTL-logic level commands.
All of the controller settings are made digitally, using the separate setting device, EM-236 Interface Unit. With this device the settings are easily copied to an other or even to multiple controllers.

Operating voltage	12-35Vdc
Idle current	n. 20mA
Current settings	0.1 -6A (step 0.1A)
Auxliary oscillator	50-10000Hz
Frequency accuracy	typ. 0.5%
Ramp adjust	0.1-5s (0 to 10000Hz)
Control level	"on" when Uin 4 -30V
	"off" when Uin 0-1V or open
Max. step freq.	15kHz
Operating temp.	0-50℃
Dimensions	87x72.5x25mm
Weight	100g

EM-314 BLOCK DIAGRAM

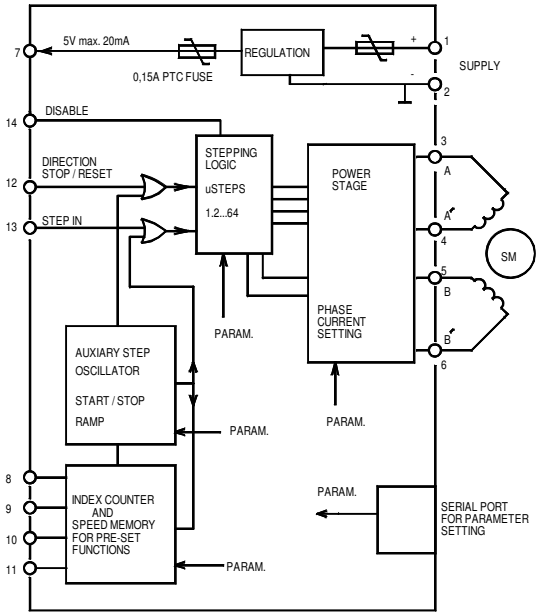

CONTROL INPUT CONFIGURATION

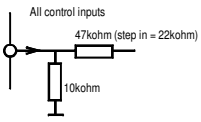

CONNECTIONS

Operating voltage 12-35Vdc, ripple smaller than 20%.
The card has no internal fuse. The use of an external fuse is recommended. Incorrect supply polarity can damage the controller. All control inputs work with positive control 4-30V. Inputs can be controlled with PLC or TTL signals. 5V auxiliary output (terminal 7) can source max. 20mA.

CONTROL -inputs

STEP IN is the input for stepping pulses. One steps is done with the positive edge of the input pulse.
DIR/STOP/RESET input is normally used to choose the rotational direction. If preset functions are used (terminal 8 to 11) this input can act as a stop input, and if preset sequence is used it will also reset the sequence counter. This input is triggered with up going pulse edge.
DISABLE will shut down power stage and hold it disabled, this input has the highest priority. But it will not reset a sequence. So it is recommended to stop and reset functions before releasing disable to avoid any possible uncontrolled startup.
PRESET IN 1-4 are presettable function inputs. These are used to activate chosen preset function. Function parameters include speed, direction, and distance in steps.
If stepping distance is chosen to be zero, the drive will be continued as long as input is selected or STOP is activated. In other words the function works as preset speed driving.

PARAMETER SETTING

The card settings are made with a EM-236 Interface Unit or Ementool Lite PC soft-ware and EM-268 USB-dongle. EM-236 is connected to a red connector on the card.
At first it will display the cards type and program version. Answering yes for LOAD and EDIT alternative the cards parameters are retrieved and displayed as a list that can be browsed with the arrow keys. Adjustment is done with +/- keys. The adjusted parameters are saved by pressing the SAVE key for about 2 seconds. After this, a notification will appear that that the new values has been SEND and SAVED.
By choosing the MONITOR function, you can monitor the cards operation.

Status LED codes

continuous - power on
disable input on - slow blinking
temp. limit disable - fast blinking

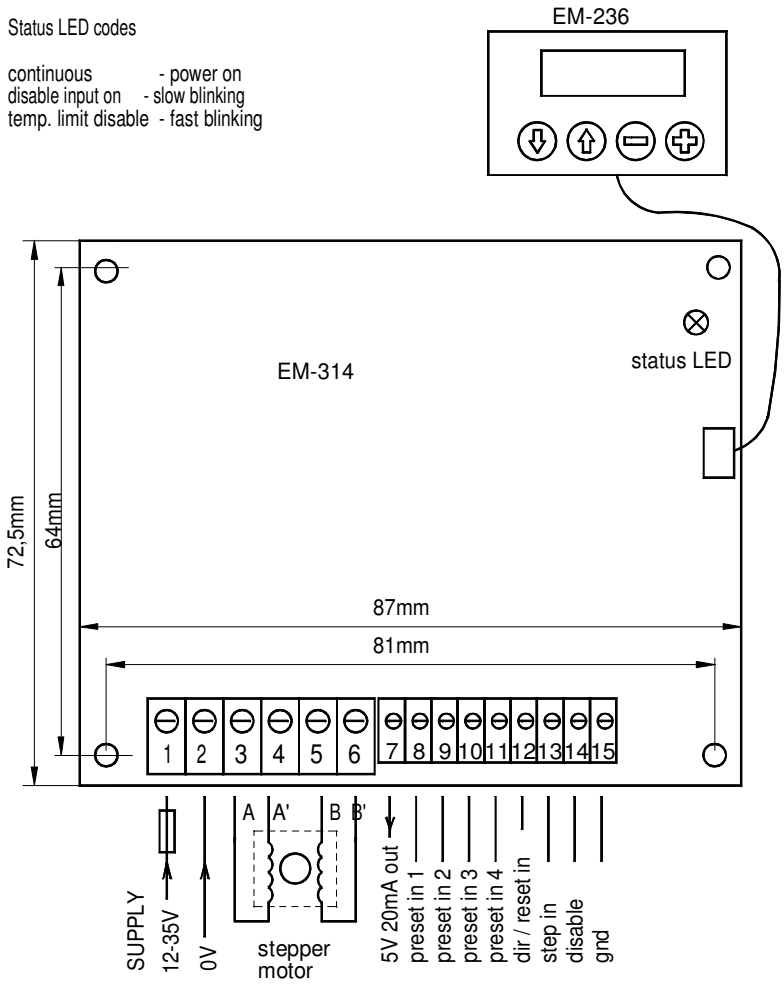

PARAMETER EFFECT

1.The stepping mode determines how much motor moves when card receives a step pulse. The most precise results are achieved with so called micro-stepping (partial step) setting and the highest possible resolution is 1/64-motor step agains one incoming step pulse.
2.Ramp setting is common for acceleration- and deceleration. Ramp is in use with preset functions.
3.The current drop function limits the current to the set percentace during the rest-stage. This reduces the amount of the heat that motor has to dissipate. Notice. Lower values than 100% can reduce precision in micro-stepping driving.
4. Phase current limiting during the drive.
5. and 6. are not in use.
7.-22. These are to determine preset functions which are activated with PRESET IN # inputs. There are four preset functions available to be determined.
7.-10. Parameters to select the preset direction.
11.-14. Parameters to set the stepping frequency = speed
15.-22. Parameters for stepping amount = distance.

For example: Par.15 set to 393 and Par.16 set to 41 will result in 41393 steps total when terminal 8 (preset in 1) is activated.
Notice.
The movement is in ratio to the used stepping mode. With 1/64 mode the movement is smallest, that is:
41393/64 = 646 + 49/64 full steps

MONITORABLE VALUES

1. last activated preset function
2. sequence step down counter to zero
3. Step counter. Reset with a new sequence.

PARAMETERS of EM-314 prog 1.0
default values in brackets.

1. Stepping mode (0-6) [3]
 0 = full step
 1 = half step
 2 = quarter step
 3 = 1/8 step
 4 = 1/16 step
 5 = 1/32 step
 6 = 1/64 step
2. Ramp time 0.1-5s (1-50) [10]
3. Current 1s after stop (1-4) [1]
 1. 100% (= normal)
 2. 50% (reduced)
 3. 25% (reduced)
 4. 0% (current disabled)
4. Phase current 0.1-6A (1-60) [10]
5. not in use
6. not in use

Preset run directions
7. preset 1. 0=fwd 1=rev [0]
8. preset 2. 0=fwd 1=rev [0]
9. preset 3. 0=fwd 1=rev [0]
10.preset 4. 0=fwd 1=rev [0]

Preset run frequencies
11. preset 1. 50-10000Hz (5-1000) [10]
12. preset 2. 50-10000Hz (5-1000) [10]
13. preset 3. 50-10000Hz (5-1000) [10]
14. preset 4. 50-10000Hz (5-1000) [10]

Index run counting values 0-1000000 step
Setting 0= continuous run
15. preset 1. 0-999 (0-999) [0]
16. preset 1. 0-1000 x 10^3 (0-1000) [0]
17. preset 2. 0-999 (0-999) [0]
18. preset 2. 0-1000 x 10^3 (0-1000) [0]
19. preset 3. 0-999 (0-999) [0]
20. preset 3. 0-1000 x 10^3 (0-1000) [0]
21. preset 4. 0-999 (0-999) [0]
22. preset 4. 0-1000 x 10^3 (0-1000) [0]

23. min start freq. 50-10000Hz (5-1000) [10]

EM-316A BRUSHLESS DC-MOTOR DRIVER 12-35V 10A

FEATURES

- Three phase output
- Speed and torgue adjustment
- Open/closed loop modes
- Dynamic braking
- Current limit and trip
- Fault and overcurrent outputs
- 60° / 120° commutation options
- Good efficiency
- Low EMC emissions
- DIN-rail mountable
- EM-316A is compatible with EM-316
- Added EM-A1 card slot for ±10V control
- Rpm-pulse output option (prog v1.5)

GENERAL

EM-316A is brushless DC-motor driver with hall sensor feedback. The unit has a mosfet power stage with good efficiency and it meets also todays EMC requirements. The driver can be used with 120° or 60° commutation. The unit has the basic digital command inputs like direction, brake, start/stop, disable and there is analog inputs for speed and current control. One digitally presetable second speed (speed-2) is possible to activate with digital command input. EM-316 has two NPN outputs for fault and overcurrent indication use. Some input and output functions can be modified with parameters. Driver includes overvoltage, undervoltage and overtemperature protections. These fault situations are indicated with fault on-board LED. Overtemperature and current limit situations can be reset with reset input, reset-timer or by setting analog speed control to value to 0.

There are two control options for speed. Direct control (open loop) sets motor voltage in propotion to control voltage as with a standard DC-motor. Closed loop uses hall sensor feedback for speed control, this modeoffers good speed regulation.
Start and stop ramps work in both mode. Speed adjust range, closed loop rpm range and rampse can be set with parameter.
Anolog input are filtered so that there can also use PWM signal for control speed and current.
EM-316A has added card slot for EM-A1card, which make possible to use symmetric control -5..0..+5V (rev-stop-fwd)
EM-A1 card generate also -5V auxliary voltage for local potentiometer control

Setting can be done digitally with EM-236 interface unit or with Emen-Tool lite program installed in PC and EM-268 adapter cable.
Parameters stored into nonvolatile memory of device. This interface unit can also be monitored the current and rpm of motor.

Device can be installed in DIN-rail base and some enclosure options are also available.

TECHNICAL DATA

Supply voltage 12-24V (11-35Vdc)
Overvoltage shut down 40V
Idle current typ. 30mA
Max current 10A cont (Tamb. 40 °C)
Max current peak 25A (max 2s)
Pwm frequency typ. 16kHz
Overtemperature Temp shut down 90°C
Current limit setting 0.1-25A (step 0.1 A)
Current limit analog scale 0-5V = 0-25A
Logic level of digital inputs
"off" = 0-1V or open / "on"= 4-30V
Input impedance of logic inputs 10k
Response time of digital input 2ms
Analog input range 0-5V up to 0-10V
Input impedance of analog inputs 100k
Input filter of analog input 100Hz
Overcur. and fault outputs NPN max 50mA
EMC measured for industrial and houshold env.
PCB material flammability class UL94V-0
Dimensions 89x73x32mm
Weight 200g

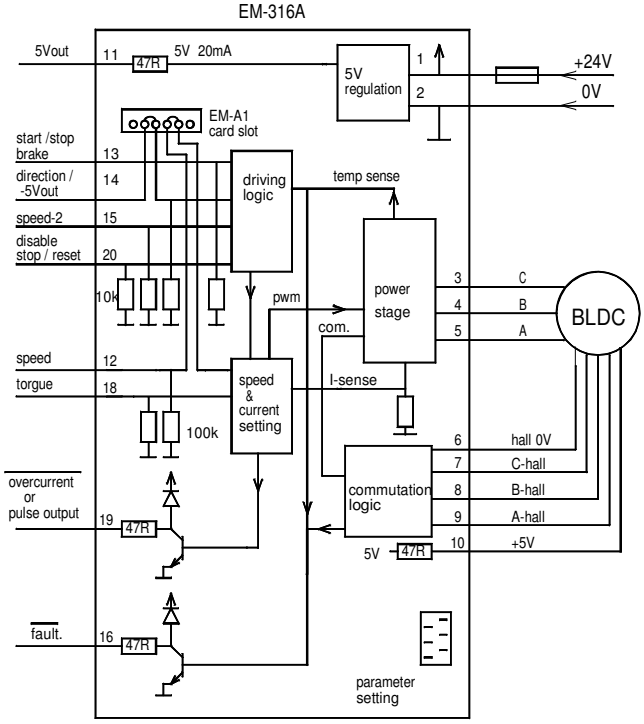

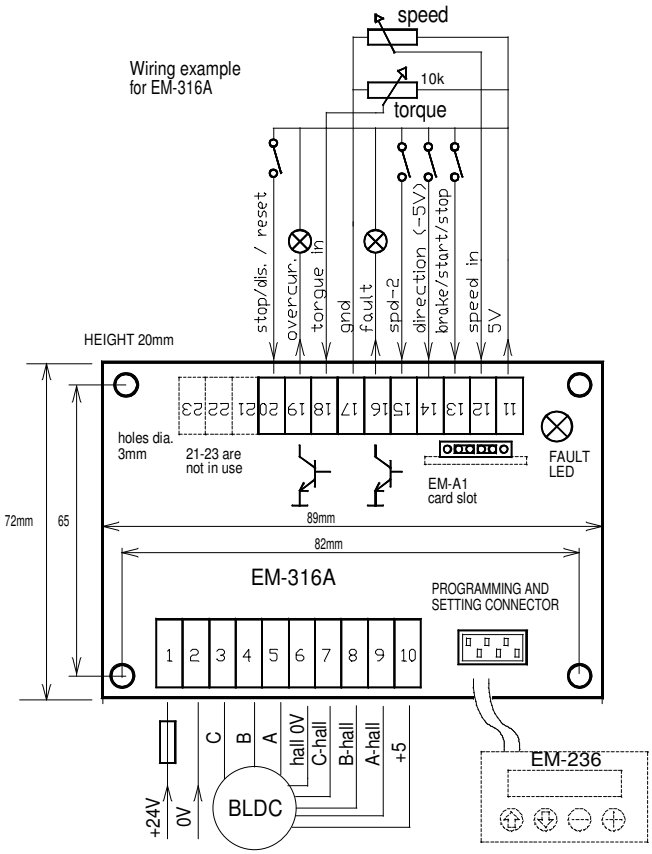

SETTABLE PARAMETERS (prog. 316 v1.5)

EM-316A parameters set with interface unit EM-236 or with Ementool-Lite and EM-268

1. mode: open loop =0 / closed loop=1 (0)
2. closed loop range 0-4 (3)
   0=30000rpm
   1=15000rpm
   2=9000rpm
   3=5000rpm
   4=3000rpm
3. start ramp 0-5s / 0-50 (1s)
4. stop ramp 0-5s / 0-50 (1s)
5. I-trip delay 1-255ms / 0-255 0=no trip (200ms)
6. scale start speed 0-25.5% / 0-255 (0)
7. scale gain 0-2.55 / 0-255 (200)
8. closed loop dynamic P-factor 1-200 (10)
9. closed loop dynamic I-factor 1-200 (10)
10. commutation angle 120°=0 / 60°=1 (0)

11. pin 13 input mode
    0 = brake
    1= start / stop
    2= start / brake
12. current limit 0-25A / 0.1-250 (4A)
    0= current setting with pin 18
13. speed-2 value 0-100% / 0-100 (50)
14. I-trip reset mode (0)
    0= only with disable pin
    1= with speed input change 0 to up
    2 = with direction input
    10-200 = timer reset 1-20s. (0)
15 Over temp reset mode (0)
    0= only with disable input
    1 = with speed input change 0 to up
    2 = 10-200 timer reset 1-20s.
16 I-trip indication (0)
    0 = I-trip indication to pin16
    1 = No I trip indication to pin 16 or 19
    2 = I-trip indication to pin 19
    3 = pin 19 reserved only for I-trip indication
17 pulse output for pin19 0-5 (0)
    0 = not in use = pin 19 set with parameter 16)
    1 = 3pulse/round (possible only when param 2 is 2,3 or 4)
    2 = 1pulse/round
    3 = 1pulse/ 2round
    4 = 1pulse/ 3round
    5 = 1pulse/ 6round

MONITOR VALUES

1. current 0-25A / 0-250
2. hall rpm 0-1000 / 0-1000Hz

TAKE IN USE

Operating voltage 12-35Vdc ripple less than 20%
An external supply fuse is recommended (2-16A)

Be sharp when connect motor wires, because there is lot of combination. If motor takes much current or run roughly then change wiring.

Default settings are in brackets in parameter list.
This are good start-up values

In example picture beside there all input connected, but device work also with less wiring. So connect only needed functions.

Overcurrent and fault outputs are NPN type, and pull when activates, This could also connect to PNP input if uses 2.2k external pull up resistor

Speed adjusting input range can be set with parameter 6 and 7. see picture below

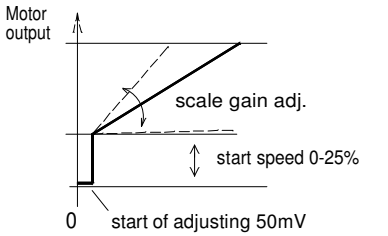

CONTROL INPUTS

Speed input is a analog control input for speed setting.
Set signal can be between 0-5V and 0-10V
Speed scaling can be made with parameter 6 and 7.
EM-316A has optionally possibility to use symmetric control (±5V up to ±10V). This can be done with connecting the EM-A1 into card Remove two jumper and put A1 card into slot. Then the direction input will give -5V (max. 5mA), and speed input is symmetric, refered to gnd (0V =stop). If local potentiometer is used, then connect potentiometr ends to +5V (pin 11) and -5V (pin14) and the slide can connect to pin12 . Use potentimeter which nominal value is 10-100k

Torgue input is analog input for current limit setting.
0-5V signal to 0-25A current. (if parameter 12 is =0)
If parameter value is something else than zero, then current limit is then = parameter value + analog input value.

Analog inputs above can also control with PWM signal.
Recommended PWM frequency is over 400Hz.

Brake input is a digital input. Normally this actives brake function. It means that motor poles shorted and speed set to zero. But this input can be set to work also as start/stop input.
Input functions can be set with parameter 11.
In start/stop mode the start work with positive command.
NOTICE ! Current limit doesn't limit braking current, so it is not recommend to use this for long and high inertia braking.

Direction input is a digital input. It will change the rotation direction. It uses automatically stop/start ramps during change.

Speed-2 input is a digital input which. enables speed-2, Speed presetted with parameter 13.

Stop/ disable input is a digital input, which disabled driver Motor goes to freewheeling (all poles floating). This input can be set to work also as reset with parameter 14 and 15
This input has highest priority.

INDICATIONS.

Fault led:
Fast blinking = I-trip
Random blinking = current limit
Continuous = overtemp, disable input "on",

Fault output: (Pin-16 PNP open collector output)
Overtemperature, Overvoltage, Undervoltage.
This indicates also I-Trip if parameter 16 is set to = 0

Overcurrent output : (pin-19 PNP open collector out)
This output indicates when current limit is exceeded.
- if parameter 16 is set to =2 then it indicates also I-trip
- if parameter 16 is set to =3 then it indicates only I-trip

EM-318 STEPPER MOTOR DRIVER 3A 12-24V microstepping and presettable function inputs

FEATURES

- Bibolar chopper
- 1, 1/2 , 1/4.....1/64 steps
- Four preset function inputs
- PNP or TTL control
- Quiet run current control
- Acceleration / deceleration ramps
- DIN-rail base mountable

EM-318 is a bipolar-chopper type microstepping steppermotor controller. The bipolar operation principle suits most stepper motors and provides the best torque. The microstepping function also enables great performance at low rpm. The stepping and current regulation has been synchronized, giving a smooth and quiet operation. There are 7 different stepping options to choose from, ranging from full- to 1/64-step operation. This provides various possibilities for different speed applications.

The controller has its own auxiliary oscillator, which can be used for pre-set speed driving. The pre-set speeds can be activated by using 4 digital function inputs. The oscillator features an acceleration ramp function, which allows frequencies to be altered flexibly. The motor will also start up reliably even to higher frequencies and it is possible to shift to the desired velocity with out pace drop. The auxiliary oscillator incorporates an indexing part, which offers the possibility of running presettable operational sequences. These secuences can be activated with the 4 digital inputs. The sequence is a movement with selected speed, direction and distance (as steps). All the inputs are activated with positive logic commands. So the commands and functions are activated by connecting the input to a positive voltage. Control can also be done with TTL-logic level commands.
All of the controller settings are made digitally, using the separate setting device, EM-236 Interface Unit. With this device the settings are easily copied to an other or even to multiple controllers.

Operating voltage	12-35Vdc
Idle current	n. 20mA
Current settings	0.1 -3A (step 0.1A)
Auxliary oscillator	50-10000Hz
Frequency accuracy	typ. 0.5%
Ramp adjust	0.1-5s (0 to 10000Hz)
Control level	"on" when Uin 4 -30V
	"off" when Uin 0-1V or open
Max. step freq.	15kHz
Operating temp.	0-50°C
Dimensions	87x72.5x25mm
Weight	100g

CONTROL INPUT CONFIGURATION

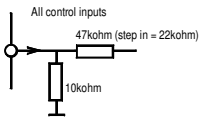

EM-318 BLOCK DIAGRAM

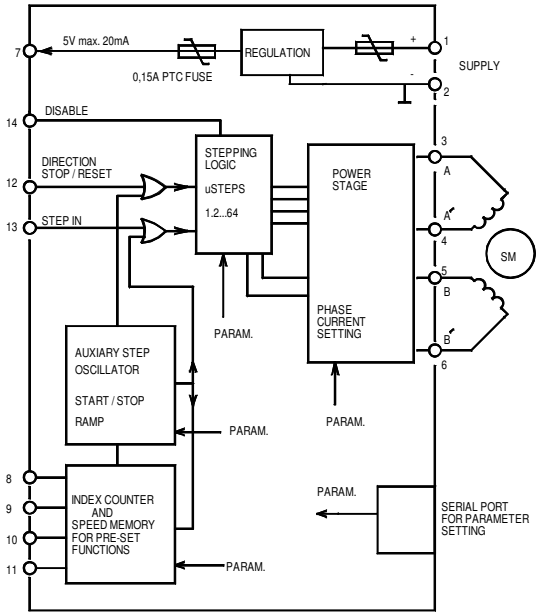

CONNECTIONS

Operating voltage 12-35Vdc, ripple smaller than 20%.
The card has no internal fuse. The use of an external fuse is recommended. Incorrect supply polarity can damage the controller. All control inputs work with positive control 4-30V. Inputs can be controlled with PLC or TTL signals. 5V auxiliary output (terminal 7) can source max. 20mA.

CONTROL -inputs

STEP IN is the input for stepping pulses. One steps is done with the positive edge of the input pulse.
DIR/STOP/RESET input is normally used to choose the rotational direction. If preset functions are used (terminal 8 to 11) this input can act as a stop input, and if preset sequence is used it will also reset the sequence counter. This input is triggered with up going pulse edge.
DISABLE will shut down power stage and hold it disabled, this input has the highest priority. But it will not reset a sequence. So it is recommended to stop and reset functions before releasing disable to avoid any possible uncontrolled startup.
PRESET IN 1-4 are presettable function inputs. These are used to activate chosen preset function. Function parameters include speed, direction, and distance in steps.
If stepping distance is chosen to be zero, the drive will be continued as long as input is selected or STOP is activated. In other words the function works as preset speed driving.

PARAMETER SETTING

The card settings are made with a EM-236 Interface Unit or Ementool Lite PC soft-ware and EM-268 USB-dongle. EM-236 is connected to a red connector on the card.
At first it will display the cards type and program version. Answering yes for LOAD and EDIT alternative the cards parameters are retrieved and displayed as a list that can be browsed with the arrow keys. Adjustment is done with +/- keys. The adjusted parameters are saved by pressing the SAVE key for about 2 seconds. After this, a notification will appear that that the new values has been SEND and SAVED.
By choosing the MONITOR function, you can monitor the cards operation.

Status LED codes

continuous - power on
disable input on - slow blinking
temp. limit disable - fast blinking

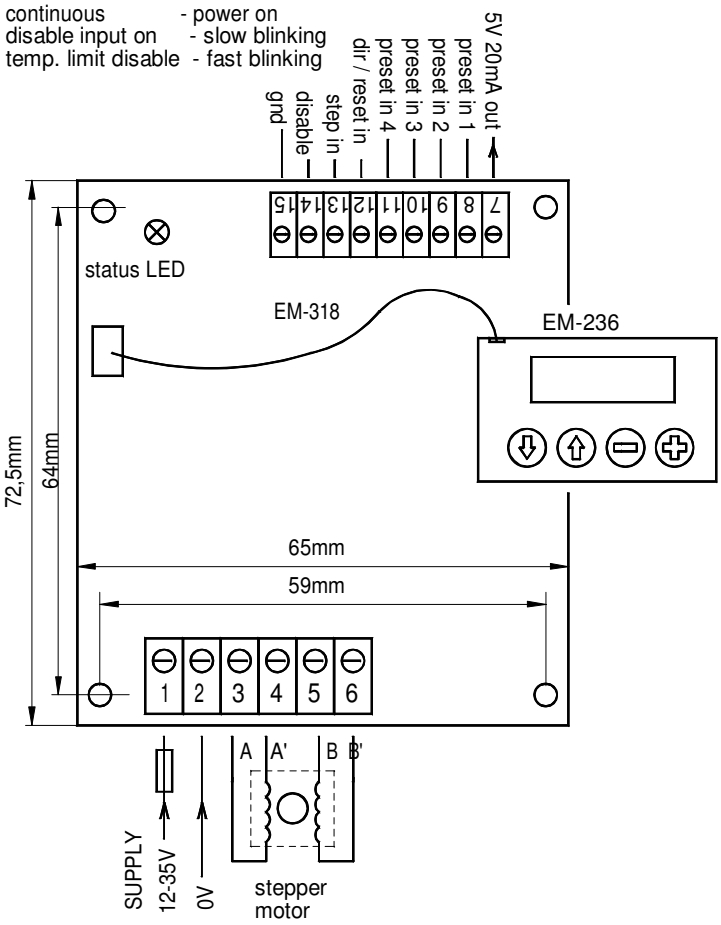

PARAMETER EFFECT

1.The stepping mode determines how much motor moves when card receives a step pulse. The most precise results are achieved with so called micro-stepping (partial step) setting and the highest possible resolution is 1/64-motor step agains one incoming step pulse.
2.Ramp setting is common for acceleration- and deceleration. Ramp is in use with preset functions.
3.The current drop function limits the current to the set percentace during the rest-stage. This reduces the amount of the heat that motor has to dissipate. Notice. Lower values than 100% can reduce precision in micro-stepping driving.
4. Phase current limiting during the drive.
5. and 6. are not in use.
7.-22. These are to determine preset functions which are activated with PRESET IN # inputs. There are four preset functions available to be determined.
7.-10. Parameters to select the preset direction.
11.-14. Parameters to set the stepping frequency = speed
15.-22. Parameters for stepping amount = distance.

For example: Par.15 set to 393 and Par.16 set to 41 will result in 41393 steps total when terminal 8 (preset in 1) is activated.
Notice.
The movement is in ratio to the used stepping mode. With 1/64 mode the movement is smallest, that is:
41393/64 = 646 + 49/64 full steps

MONITORABLE VALUES

1. last activated preset function
2. sequence step down counter to zero
3. Step counter. Reset with a new sequence.

PARAMETERS of EM-318 prog 1.1
default values in brackets.

1. Stepping mode (0-6) [3]
 0 = full step
 1 = half step
 2 = quarter step
 3 = 1/8 step
 4 = 1/16 step
 5 = 1/32 step
 6 = 1/64 step
2. Ramp time 0.1-5s (1-50) [10]
3. Current 1s after stop (1-4) [1]
 1. 100% (= normal)
 2. 50% (reduced)
 3. 25% (reduced)
 4. 0% (current disabled)
4. Phase current 0.1-6A (1-60) [10]
5. not in use
6. not in use

Preset run directions
7. preset 1. 0=fwd 1=rev [0]
8. preset 2. 0=fwd 1=rev [0]
9. preset 3. 0=fwd 1=rev [0]
10.preset 4. 0=fwd 1=rev [0]

Preset run frequencies
11. preset 1. 50-10000Hz (5-1000) [10]
12. preset 2. 50-10000Hz (5-1000) [10]
13. preset 3. 50-10000Hz (5-1000) [10]
14. preset 4. 50-10000Hz (5-1000) [10]

Index run counting values 0-1000000 step
Setting 0= continuous run
15. preset 1. 0-999 (0-999) [0]
16. preset 1. 0-1000 x 10^3 (0-1000) [0]
17. preset 2. 0-999 (0-999) [0]
18. preset 2. 0-1000 x 10^3 (0-1000) [0]
19. preset 3. 0-999 (0-999) [0]
20. preset 3. 0-1000 x 10^3 (0-1000) [0]
21. preset 4. 0-999 (0-999) [0]
22. preset 4. 0-1000 x 10^3 (0-1000) [0]

23. min start freq. 50-10000Hz (5-1000) [10]

EM-324C DC-MOTOR CONTROLLER 12-24V 3/4A

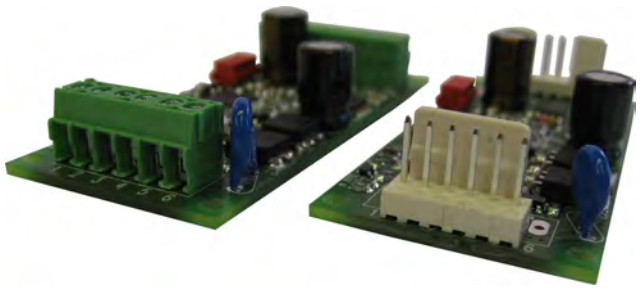

- small size
- high current output
- current limit
- zero current limit
- overvoltage brake
- speed setting
- flexible control inputs
- impulse / continuous mode
- rail base mountable
- 2KHz or 16kHz pwm frequency
- for motor 5-50W
- digital parameter setting
- Molex connector opttion available

EM-324 is a full bridge DC-motor starter. It is designed to work with DC-motor in applications where some special functions are needed. Starter has adjustable acceleration and deceleration ramps, which make possible the smooth starts and stops. Adjustable current limit protects motor against overcurrent and it can also be used as an end-stop. This device has also two settable speeds, which are usefull in positioning applications. Control inputs FW and BW start the forward and backward run. STOP is for the motor shut-down but there are also available individual limit inputs for FW and BW directions. SPEED-2 input activates preset speed-2, but it can also be used as input for analog speed control signal 0-5V. FAULT terminal has at the same time input and output function, the pin is normally high, but is pulled down in overheat and conditionally also in current trip situation. If FAULT-line is pulled down externally it will cause a stop and prevent the new start. For example, it is possible to link fault pins of several units together and achieve a synchronous stop.
There are two selectable control modes, continuous and impulse. In continuous mode the motor runs as long as the control is active. In impulse mode a short comand starts the motor, and only a new impulse will change the status. There is also few special settings start-kick and auto reverse. The card has selectable input logics. Inputs are divided in two groups, control and limit -inputs. Groups can be individually set for NPN or PNP logic. The parameters are set with EM-236 interface unit. Operation of the controller and some of its functional values can also be monitored with EM-236 interface unit.

TECHNICAL DATA (prog ver. 324C v1.4)

Supply voltage cont. max. 10-35V
Overvoltage limit adjustable 15-40V (connect motor to free)
Overvoltage dynamic brake 40V (shorting motor poles)
Start up voltage 9V, shutdown voltage 8V
Motor current cont. max. 3A, peak 7A (@ 16kHz Ta >50℃)
Motor current cont. max. 4A, peak 7A (@ 2kHz Ta >50℃)
Current limit adjustable 0.1-5A
NOTICE ! current limit is 50% boosted during start ramp.
Overheat limit 100℃
Start and stop ramp adjustable 0-5s
PWM frequency 2 or 16kHz
Speed input scale (speed-2) 0-5V = 0-100% pwm
Input control logic: high =4-30V, low=0-1V
Control input impedances typ. 47kohm
Limit FW / BW input imped. typ 10kohm
Control input response time typ 5ms.
Fault out. NPN open coll. max 30V / 50mA
Fault in actives Uin < 1V (NPN)
Connectors 1mm screw
Molex connector option KK 6410 series
Dimensions 32.5 x 73 x 18mm
Dimensions in DIN-rail base 35x80x38mm
CE-tested for industrial environment (emc)
Operating temp (Ta) -40...60℃
Weight 25g

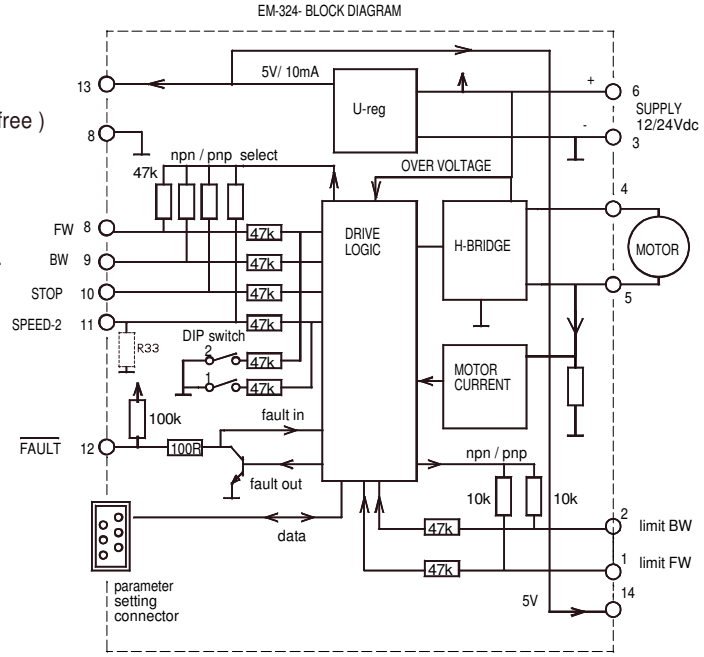

CONNECTIONS

Supply voltage must be filtered DC of 10-35V,
and ripple should be less than 30% at full load.
CAUTION ! Wrong polarity can damage the unit.
CAUTION ! Unit doesn't have an internal fuse, so
an external fuse should be added if fuse required.

MONITORABLE VALUES

1/5 Motor current 0-20A (0-200)
2/5 PWM-level-% 0-100% (0-100)
3/5 hour counter (max.65535h)
4/5 start counter (max.65535)
5/5 carry counter for start counter

FAULT-LED signal codes

1. power on	one blink
2. current on limit	led is lit
3. current trip	fast blinking...
4. zero-cur trip	long blink- short pause...
5. overvoltage	4 x blink -pause...
6. overheat	short blink- long pause...
7. timeout	3 x blink + long blink...
8. fault input	2 x short + 1x long blink...

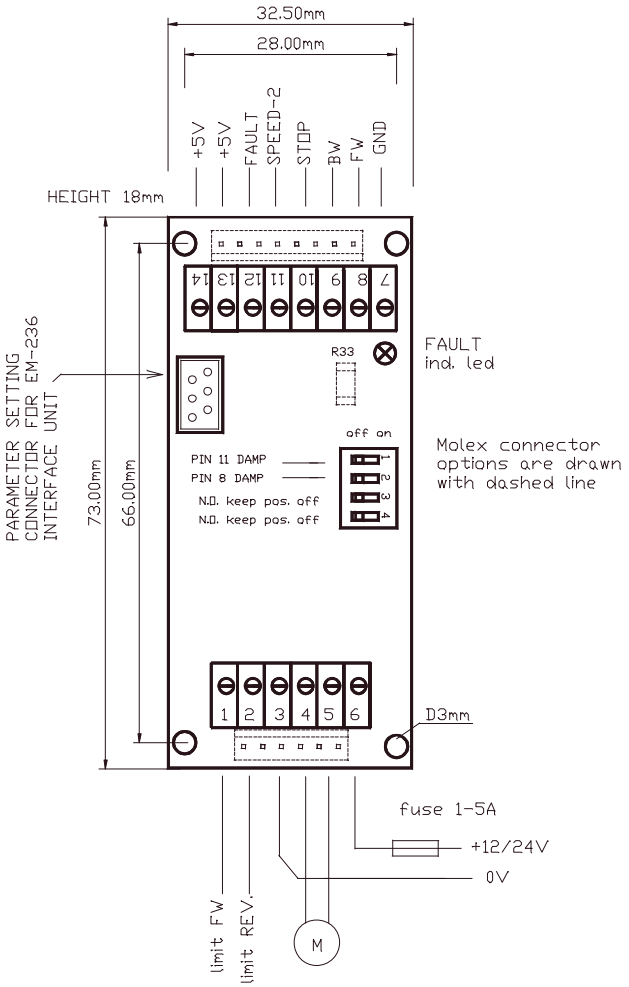

Molex connectors (with dashed lines)
6-pole 22-27-2061
8-pole 22-27-2081

ADJUSTMENT AND SETTINGS (prog ver. EM-324C v1.4)

Adjusting and parameter setting of eg.
current limit value, ramp times and speed-2
value is done with the EM-236 interface unit.
With EM-236 the parameters and adjusted
values can also be copied to multible
devices accurately and reliably.

SETTABLE PARAMETERS 20pcs. (defaults in brackets)

1- command mode: 0,1 and 2 (0)
  0= continuos FW / REV
  1= impulse commands FW / REV. with stop
  2=impulse commands FW / REV without stop
2- start condition combinations: 0-3 (1)
  0= start both direction after I-trip and Stop
  1= start only opposite direction after I-trip
  2= start only opposite direction after Stop
  3= start only opposite direction after I- and Stop
3- input logic combinations 0-7 (0)
  PNP control with positive signal and input has pull down res.
  NPN control with negative signal and input has pull up res.
  N.C. = input resistor as above, but control signal logic is inverted
  0= cont. PNP, limits PNP 4=cont. PNP, limits PNP N.C.
  1= cont. NPN, limits PNP 5=cont. NPN, limits PNP N.C.
  2= cont. PNP, limits NPN N.C. 6=cont. PNP, limits NPN
  3= cont. NPN, limits NPN N.C 7=cont. NPN, limits NPN
4- running speed-1: 0-100% / 0-100 (100)
5- running speed-2: 0-100% / 0-100 (50)
  Note: If selected to 0 or 1 "speed2-input" is
  used as analog 0-5V speed control input, and
  when 1 is selected FW direction is automatically
  "on" and FWD input works as direction change
6- current limit FW: 0.1-5A / 1-50 (30)
7- current limit REV: 0.1-5A / 1-50 (30)
8- Trip combinations: 0-3 (1)
  0= no I-trip, no zero-current-trip
  1= only I-trip
  2= only zero-current-trip
  3= both I-trip and zero-current-trip
9- I-trip delay: 0-255ms / 0-255 (20)
10- Fault output combinations: 0-3 (1)
  0= I-trip and zero current won´t cause fault output signal
  1= only I-trip causes fault output signal
  2= only zero current causes fault output signal
  3= both I-trip and zero currenT causes fault output signal.

11- overvoltage limit: 15-40V / 15-40 (35)
  Overvoltage can be caused by load driving the motor or
  when braking the speed down but supply can not accept
  the current back from driver. Exceeding the limit will cause
  the power stage set to free-wheel state.
  With a direct battery supply the brake current is charging the
  battery and the voltage will not normally rice.
  There is also 40V fixed dynamic brake point = motor pole shorted
12- load compensation: 0-255 / 0-255 (0)
  Load compensation (RxI) improves low speed and start
  torgue, but too high compensation achieve unstable running.
  Run motor at low speed (30%) Increase compensation
  with small steps until motor start behaviour unstable,
  t hen decrease value about 10%
13- timeout: 0-255s. / 0-255 (0=not in use) (0)
14- Reset for start and hour-counter 0/1 (0)
  selecting 1 and push SAVE => reset counters
15- start ramp: 0-5s / 0-500 (100)
16- stop ramp: 0-5s / 0-500 (100)
17- start-kick 0-200ms / 0-200 (0)
  This gives full drive at start and I-lim is 7A
  The start kick length is 0-200ms.
18- I-trip auto reversing 0-5s / 0-500 (0)
  Change automatically run direction when I-trip occurs
  the revesing time will select with this parameter
19- Freewheel options 0-5 (0)
  0= freewheeling when overvoltage
  1= freewheeling when overv. or stopped
  2= freewheeling when overv. or during stop ramp
  3= freewheeling when overv. or when stopped or during stop ramp
  4= freewheeling when stopped
  5 =freewheeling disabled
20-operating frequency 1=2kHz / 2=16kHz (1)

EM-324C-JS1 DC-MOTOR CONTROLLER 12-24V 3/4A

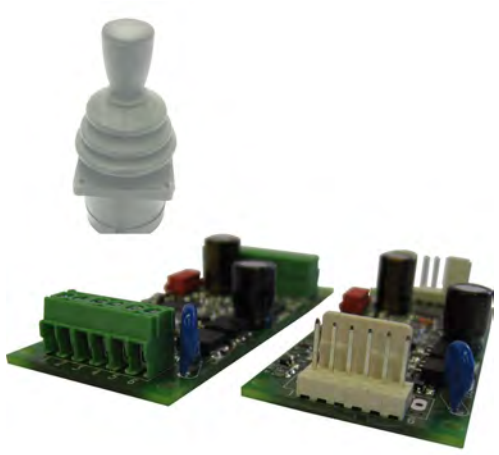

- JS1 is specially for joystick use
- three point calibration
- small size
- high current output
- current limit
- overvoltage brake
- own speed ranges for FW and REV.
- rail base mountable
- digital parameter setting
- 2KHz or 16kHz pwm frequency
- for motor 5-50W
- JS1 program can be update also for standard EM-324 board

EM-324C-JS1 is a full bridge DC-motor starter. It is designed for joystick controlled DC-motor applications. The driver has adjustable acceleration and deceleration ramps, which enable the smooth starts and stops. Adjustable current limit protects the motor against overcurrent and it can also be used as an end-stop. This device has also two settable speeds, separate speed ranges for forward and reverse direction. Control input is specially designed for joystick control. The joystick range calibration is done automatically, when calibration function is activated. Calibration detects forward, reverse and midpoint positions. FAULT terminal has simultaneously both input and output functions, the pin is normally high, but is pulled down in overheat and conditionally also in current trip situation.
If FAULT-line is pulled down externally it will cause a stop and prevent it from starting again. For example, it is possible to link fault pins of several units together and achieve a syncronous stop.
There are also special settings as start-kick which can be used in case the device is in danger of being jammed.
Limit input can be individually set for NPN or PNP logic.
The parameters settings can be done with various EM- interface unit. Operation of the controller and some of its functional values can also be monitored with interface units.

TECHNICAL DATA (prog ver. 324C-JS1 v1.0)

Supply voltage cont. max. 10-35V
Overvoltage limit adjustable 15-40V (connect motor to freewheel)
Overvoltage dynamic brake 40V (shorting motor poles)
Start up voltage 9V, shutdown voltage 8V
Motor current cont. max. 3A, peak max. 7A (@ 16kHz, Ta<50℃)
Motor current cont max. 4A, peak 7A (@ 2kHz, Ta<50℃)
Current limit adjustable 0.1-5 A (at start max 7A)
Overheat limit 100℃
Start and stop ramp adjustable 0-5s
PWM frequency 2kHz / 16kHz (selectable)
Joystick input scale 0-5V or 0-10V (if dip 2 = ON)
Input control logic: high =4-30V, low=0-1V
Control input impedances typ. 47kohm
Limit FW / BW input imped. typ 10kohm
Control input response time typ 5ms.
Fault out. NPN open coll. max 30V / 50mA
Fault in actives Uin < 1V (NPN)
Motor and supply connectors 2.5mm
Control connectors 1mm
Dimensions 32x72x18mm
Dimensions in DIN-rail base 35x80x38mm
CE-tested for industrial environment (emc)
Operating temp (Ta) -40...60℃
Weight 25g

EM-324C-js1 - BLOCK DIAGRAM

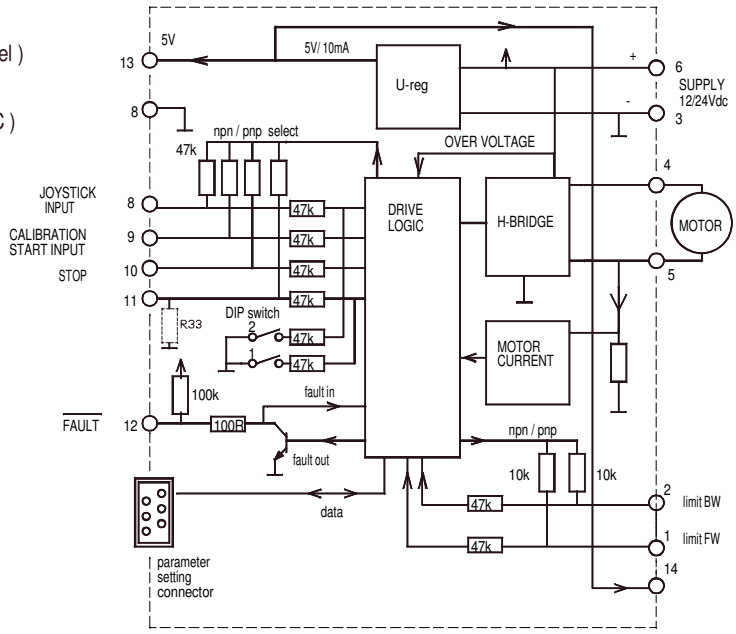

CONNECTIONS

Supply voltage must be filtered DC of 10-35V,
and ripple should be less than 30% at full load.
CAUTION ! Wrong polarity can damage the unit.
CAUTION ! Unit doesn't have an internal fuse, so
an external fuse should be added if fuse required.

MONITORABLE VALUES

1/6 Motor current 0-20A (0-200)
2/6 PWM-level-% 0-100% (0-100)
3/6 hour counter (max.65535h)
4/6 start counter (max.65535)
5/6 carry counter for start counter
6/6 joystick position 0-1024

FAULT-LED signal codes

1. power on	one blink
2. current on limit	led is lit
3. current trip	fast blinking...
4. zero-cur trip	long blink- short pause...
5. overvoltage	4 x blink -pause...
6. overheat	short blink- long pause...
7. timeout	3 x blink + long blink...
8. fault input	2 x short + 1x long blink...

Special codes for calibration mode
solid light = calibration can be done
blink light = calibration is done

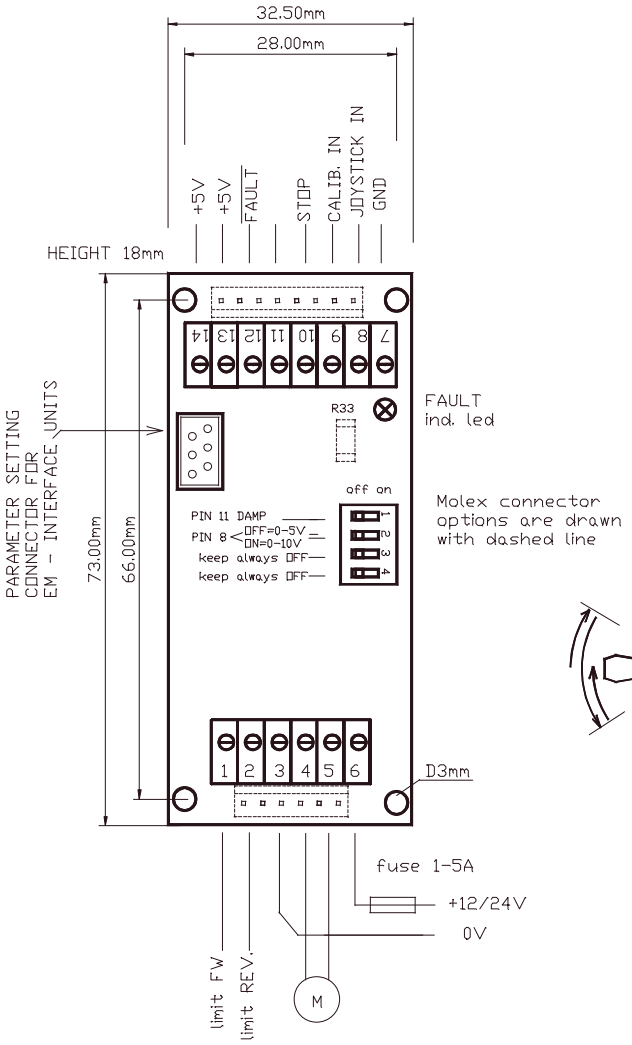

ADJUSTMENT AND SETTINGS (prog ver. EM-324C-JS1 v1.0)

Adjusting and parameter setting of eg.
current limit value, ramp times and speed-2
value can be done with various EM-interface units
EM-236 is basic parameter setting device.
EM-268 and EM- 328 are USB-serial converters,
which makes it possible to set parameters also
with computer where is installed EmenTool Lite
program. EM-326 is Bluetooth -dongle which can
be used in smart devices with the EmenTool App.

SETTABLE PARAMETERS 20pcs. (defaults in brackets)

1- not in use
2- not in use
3- input logic for limit inputs 1 or 2 PNP/NPN (1)
1= limit inputs PNP 2= limit input NPN
4- max. speed FW. 0-100% / 0-100 (100)
5- max. speed REV. 0-100% / 0-100 (100)
6- current limit FW. 0.1-20A / 1-200 (30)
7- current limit REV. 0.1-20A / 1-200 (30)
8- current trip 0= disabled, 1= enabled : (1)
9- not in use
10- Fault output combinations: 0-2 (0)
0= overtemp, current trip. overvoltage
1= as above + calibration indication
2= current limit indication
NOTICE ! fault input is disabled in setting 2

11- overvoltage limit: 15-40V / 15-40 (35)
Overvoltage can be caused by load driving the motor or
when braking the speed down but supply can not accept
the current back from driver. Exceeding the limit will cause
the power stage set to free-wheel state.
With a direct battery supply the brake current is charging the
battery and the voltage will not normally rise.
There is also 40V fixed dynamic brake point = motor pole shorted
12- load compensation: 0-255 / 0-255 (0)
Load compensation (RxI) improves low speed and start
torgue, but too high compensation achieve unstable running.
Run motor at low speed (30%) Increase compensation
with small steps until motor start behaviour becomes unstable,
then decrease value about 10%
13- timeout: 0-255s. / 0-255 (0=not in use) (0)
14- reset for start and hour-counter 0/1 (0)
selecting 1 and push SAVE => reset counters
15- start ramp: 0-5s / 0-500 (50)
16- stop ramp: 0-5s / 0-500 (20)
17- start-kick 0-200ms / 0-200 (0)
This gives full drive at start and I-lim is 30A
The start kick length is 0-200ms.
18- Dead band wide 0-50% / 0-50 (5)
19- Freewheel options 0-3 (0)
0= no freewheel
1= freewheel when stopped
2= freewheel during stop ramp.
3= freewheel during stop ramp and if stopped
20- Pwm frequency 1=2kHz / 2=16kHz

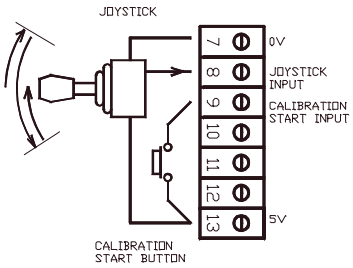

JOYSTICK CALIBRATION

Give about 3s. control signal to CALIB. start
input. when Fault-led of device will be lit:
-push joystick full forward, then
-pull joystick full reverse, then
-release joystick to mid position, then
-wait until led starts to blink = calibration done

NOTICE ! calibration above defines joystick
full fw, full rev. and mid point positions.
But the max. speed can be set with
parameters 4 and 5

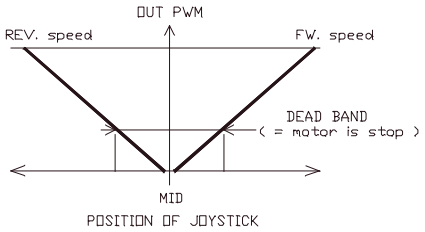

EM-324-SAF POSITIONING DRIVER 12-24V 4A

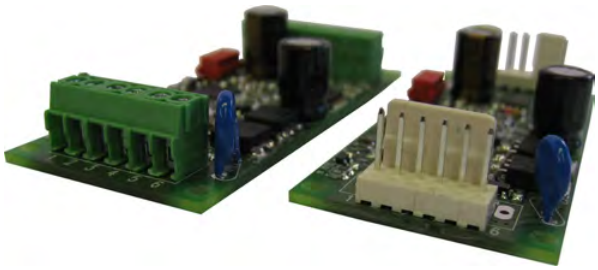

FEATURES

- analog feedback
- multiple dynamic settings
- solid state power stage
- one or two pulse feedback
- voltage or mA control
- position accuracy max. 0.2%
- versatile setting options
- digitally settable parameters
- housing options available
- 2/16kHz pwm frequncy options
- CE marked product

EM-324-SAF is a positioning driver to be used with DC-motors. The solid state power stage operates with high efficiency as it is realized with FET-transistors. Its literally everlasting compared to relay solutions. Control and feedback is done with analog signal. Control signal can be a voltage in range of 0 to 11V or current from 0 to 20mA. Feedback signal can be in the range from 0 to 11V. Driver supports also a potentiometer feedback, with auxiliary voltage outputs of 0V and 5,5V to exitate the potentiometer. The max. accuracy available for positioningof is 0,2% that is adequate for most actuator positioning applications.

The settings and adjustments are done with parameters as in all new generation Electromen products. Movement range can be modified from both ends with SW-limit parameters. Current limits and driving speeds can be set individually for both directions. Driver includes also many other dynamic adjustment possibilities like parameters for load compensation, dead-zone setting (positioning window), start and stop ramps for a smooth direction change and braking zone for well operating positioning.

The parameter setting and status monitoring is done with EM-236 Interface Unit. With EM-236 the right parameters can also be easily copied to other driver units. The on-board LED-light indicates the possible fault situations with blinking codes. If needed, the fault can be forwarded trough combiport to other driver cards. Alternatively this port can be set to give out the "position OK" information or it can even indicate the position with an analog voltage signal. Device is EMC tested for industrial and household environment and operating temperature range is quite wide.
There are also some housing options available for EM-241-SAF driver card.

TECHNICAL DATA

Supply voltage	10-35V
Shut down voltage	8V
Power up voltage	9V
Motor current cont.	4A at 2kHz / 3A at 16kHz mom. 6A (Ta<50℃)
Current limit	0.1-6A (in start max. 8A)
Overtemp. limit	100℃
PWM frequency	2kHz / 16kHz
Analog feedback ranges	0-5V / 0-10V
Control input ranges (position)	0-5,5V / 0-11V / 4-20mA
Positioning potentiometer	10k recom. 22k max.
Input resistor for mA-signal	250ohm (socket on board)
Position out. signal range	0-5V or 0.5 - 4.5V, 0V for FAULT
Digital input levels	high =4-30V, low=0-1V
Digital input impedances	typ. 47kohm
Limit-FW / -BW and pulse inputs	imp. typ 10kohm
COMBIPORT pin.12	
- Fault output, NPN, open coll.	max 30V / 1A
- Disable input	Uin < 1V (NPN)
- position output impedance	1kohm
Connectors for motor and supply	max. 1mm² cable
Connectors for signals	max. 1mm² cable
Operating temp(Ta)	-40...60℃
Dimensions	72x32x25mm
Weight	80g
CE-tested for household and industrial environment (EMC)	EN-55022B, EN-61000-4-3, -4, -5, -6 passed

EM-324-SAF BLOCK DIAGRAM

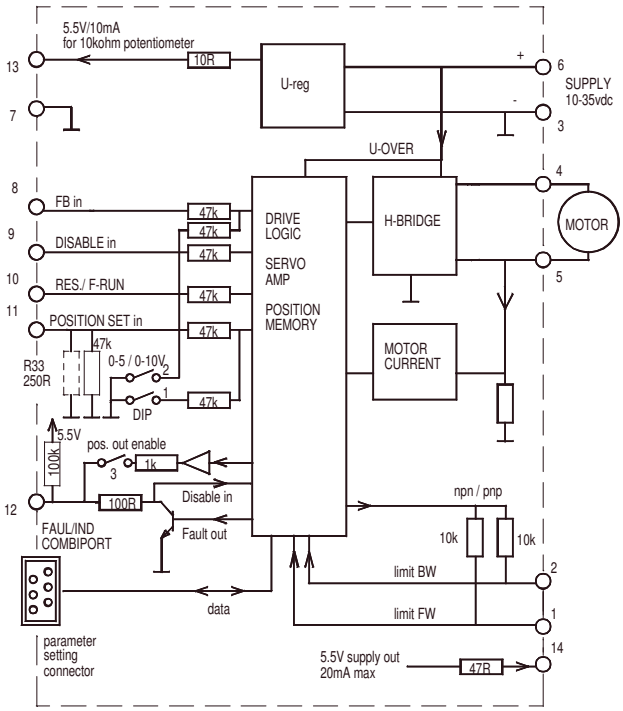

CONNECTION ADVISE

Supply voltage should be in the limits of 10-35Vdc.
Ripple should be lower than 30% even with maximum load.
NOTICES!
1. Wrong supply polarity can damage the device.
2. There is no inbuilt fuse in this device. So use an additive outside fuse and choose it according to your application.
3. The meaning of the terminals can change when changing the parameters (pls.see the parameter list and explanations).

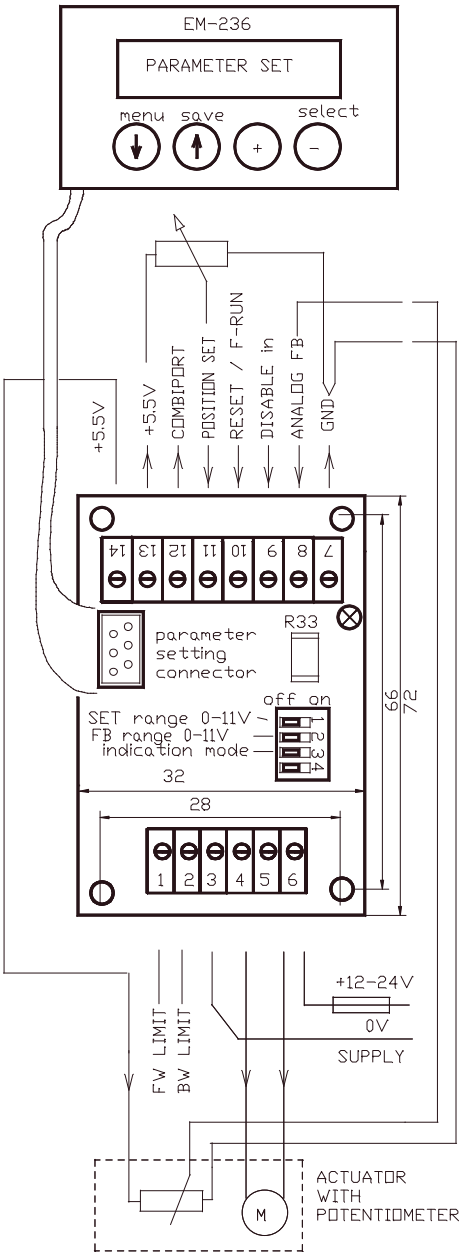

NOTICE !
IF WANT TO USE 4-20mA SET SIGNAL THEN ADD 250ohm RESISTOR TO PLACE R33

TAKING IN TO USE

The setting of the driver is done with parameters, and the parameters can be set and edited with EM-236 Interface Unit. This makes changing easy and precise. Also the copying of the same parameters to multible units is simple and same time accurate. The same parameters that are saved to one unit can be copied to an other unit with just one push of an button.
Start by checking and setting the hardware related parameters. After that the actuator can be connected and operation fine tuned with other parameters.

Control range setting
Options for max. ranges are 0 to 5,5V, and 4 to 20mA if you place a 250ohm resistor to the resistor socket on the driver board. Using 0 to 11V range requires you to set the DIP switch 1 to "ON" position.
An individual control scale you can either set with parameters 21 and 22 as Volts or you can let the driver to measure your min. and max. control values.
If you choose to set the min. and max. as Volts, pls. notice that the values are in ratio to the lowest range 0-5,50V, and with 0-11V range you have to divide the actual voltage with two. With current signal you should use the 0-5,5V range, and the right value can be calculated I x 250. Eg: 4-20mA= 1,0 - 5,0V.
Most precise way is to let the driver to measure the values. So first connect and adjust minimum value to set input (pin.12) and change the par.21 to val. 551. After value stops blinking the dispaly shows the measured value. Then adjust the maximum control value to pin.12, and change par.22 to 551. After a while you will see the measured value in display. Always remember to to save with long push to save button, before disconnecting EM-236 and taking power off from the driver.
Notice: If control min. value is set higher than max. value the movement range will be inverted and set accordingly.

Feedback
Feedback range is always 0 to 5,5V as default.
By setting the dip switch 2 to "ON" the range can be multiplied to 0 - 11V.
If the actual feedback signal can not reach the ends of the default range, parameters 23 and 24 can be used to acommodate the ranges.
Setting the inner and outer software limits to suitable percentace values will compensate the narrow control signal range to the default range.

Forced run (F-run)
Forced run enables the motor to be driven to the mechanical end. That means that the motor or actuator can be driven beyond the determined soft ware limits. The SW-limits are used to determine the operational movement range. But the parameter 14 value and the use of F-run will enable the wider driving range for service use or for use in some special situations of the application. F-run is started with a long command (>5s) to pin 11. The F-run speed is determined with parameter 5 and the driving is stopped with current trip or limit switch that cuts off the motor current. Motor will return to its servo position right after the signal to pin 11 disappears.
Notice. The same pin 11 is used also as a reset input with short command (<5s).

Positioning dynamics

Dead zone (par.17) is to determine the accuracy of positioning.
This parameter has the major effect to positioning accuracy.
The smaller it is determined the more accurately the positioning is done.
Notice. If it is set too small compared to accuracy level of the mechanics an oscillation or unstability in positioning will occur.

Braking zone (par. 18) is used to optimize the time needed for positioning. Too high value slows down too early, and too low value will cause an fast position passing and needs a corrective return driving.

Start and stop ramp (par. 19 & 20) are to smoothen the direction change. Often suitable value for stop ramp is half of start ramp. Too long stop ramp can make the direction change too time consuming and too short can cause mechanical stress and non desired agressivity.

Load compensation (par.11) when set to right value, will ensure the needed force to start driving and to taking the load in to the right position. With high load and too low load compensation value, the motor dont have force enough to reach the right position. Start testing with zero value and increase value untill motor behaves unstable and twitching. Thumb rule in this point is to decrease the value with 25%.

Current limits (par. 6 and 7)should be set according to the motor nominal max. current or according to the required current of the application.

Indications
Fault situations are indicated with coded blinking of a red LED. Fault alarm can be forwarded out trough combiport (pin.13). Fault situation is reset with a short (<5s) command to RES/F-run input (pin.11).
Some faults are reset automatically with a new position command to opposite direction. Instead of fault indication the combiport can be set to inform the status of the positioning as an "on position" output, or it can be set to give an analog position indication with 0-5V or 0.5-4.5V signal. Configuration of the combiport is done with par.9. Notice: If it is set to give analog information out (par.9 val3/4), also the DIP-switch 3 should be set to ON position. If combiport (pin 13) is selected to be fault output (par.9 val.1), it will also work as fault-disable input when externally pulled down.

Adjustments and settings
Parameter setting is done with EM-236 Interface Unit which is connected to a powered controller unit trough the red connector. During the start up routine the Interface Unit will display information about it self and then the name and program version of the target device (driver which it was connected to). Then it will stay on displaying EDIT & LOAD. Pushing the "yes" button will up load and show the parameter list of the driver. Now the user can scroll the list with arrows, and make value changes with + and - buttons. Changed value is effective after few seconds when the display stops the blinking. But notice, that the change will not be saved untill you give a long press (>5s) with the "save" button. This will save the changed list also to the EM-236s memory.
Now it is easy to copy the same parameters to the next driver. Just connect the unit to the next powered driver and after start up routine just press a long "save".
You can repeate this untill all needed units have been set.

LIST OF PARAMETERS prog. v1.2 (defaults in parentheses)

1 No function (0)
2 Limit input logic (1)
  1= PNP
  2= NPN
  3= PNP inverted
  4= NPN inverted
3 Speed FW: 20-100% / 0-100 (100)
4 Speed BW: 20-100% / 0-100 (100)
5 Speed for F-driving: 20-100% / 20-100 (60)
6 Current limit out, FW: 0.1-20A / 1-200 (30)
7 Current limit in, BW: 0.1-20A / 1-200 (30)
8 Current tripp delay: 0-255ms / 0-255 (20)
  (0=tripp not in use)
9 Combiport (pin 13) function: 1-4 (1)
  1= used as Fault in/out
  2= gives the "on position" information with 0V
  3= gives position indication with 0 - 5V
  4= gives position indication with 0.5-4.5V and fault =0V
10 Over voltage limit: 15-40V / 15-40 (35)
11 Load compensation: 0-255 / 0-255 (0)
12 Time out cut-off: 1-255s. / 1-255 (0= not in use) (0)
13 Hour and start counter reset (0)
  set value = 1 and press save -> counters are set to zero
14 Forced run function with >5s command to pin 11 (1)
  1= makes F-run to BW direction
  2= makes F-run to FW direction
15 Fault reset conditions 0-1 (1)
  0= reset with RESET-input or opposite direction request .
  1 = fault reset can be done only with RESET-input (pin 11)
16 No function (0)
17 Dead zone : 0,2-5% / 2-50 (10)
18 Braking zone : 1 - 8% / 1 - 8 (3)
19 Start ramp : 0,1-2,5s / 0-250 (10)
20 Stop ramp : 0,1-2,5s / 0-250 (3)
21 Set value min. 0...5,50V / 0-551 (0)
22 Set value max. 0...5,50V / 0-551 (550)
23 Inner (BW) SW-limit: 0...-50% 0-500 (5)
24 Outer (FW) SW-limit: 0...+50% 0-500 (5)

FAULT LED -blinking codes

1. I-trip	1 blink
2. time out trip	2 blinks
3. over temperature	3 blinks
4. over voltage trip	4 blinks

Pls. notice:
when card is powered the LED- blinks onse.

MONITORABLE VALUES

1 fault code (see the fault code list)
2 motor current 0-20A (0-200)
3 target position 0-100,0% (0-1000)
4 realized positin 0-100,0% (0-1000)
5 hour counter (max.65535h)
6 start counter (max.65535 starts)
7 start counters over flow counter (max. 65535)

ABOUT PARAMETERS

1. No function.
  This parameter position is not is use in this program.
2 Limit switch input terminals (pin 2 and 3) can be set to work with positive or negative logic. Positive =PNP, negative=NPN. The effect can also be inverted so that when signal is ON status is OK, and signal OFF status is "disable by limit".
3 & 4 are for speed setting of FW (out) and BW (in) directions.
5 the speed setting for "Forced run" (F-run).
6 & 7 current limit setting for FW (out) and BW (in) directions
8 determines the time the current is allowed to be on the limit value before driving is cut off (driver tripps off). Value is in milliseconds and if set to "0", the current tripping feature is disabled.
9 Configuring the combiport functions (pin 13). This terminal can work as combined input-output for fault. Or it can give a "position OK" signal after succesfull positioning. It can also be used to indicate the position with a continuous voltage signal (position signal). If position signal is chosen (val 2 or 3) the DIP3 must be set to "ON".
10 Over voltage protection switches the motor to free wheel. This saves the controller or other devices in supply line from over voltage in case the motor generates energy during slowing down or braking. This can happen with eg. in vehicle or lifting applications.
11 Load compensation (RxI-comp) enables good motor torque even with low speeds. It is good to start testing with zero value, but if the motor seems weak when starting with normal load, the value can be increased step by step untill there is power enough to start. Notice: Too high value is recognized from oscillation and/or twiching, If it is not possible to see the behavior of the motor and test the effect with momentary loading of a freely running motor the safest value for this parameter is zero.
12 Time out tripp will cut off the driving if continuous driving to the same direction exceeds the set value (statet in seconds).
13 This parameter is for resetting the start and hour counters. Saving value 1 will set to zero the drivers start and hour counters.
14 Parameter for choosing the forced run direction. F-run is started with long >5s command to RES/F-run terminal (pin 11)
15 Determines how the controller recovers from fault situation.
  Val 0. Recovers also with an opposite direction movement request.
  Val 1. fault requires a short (<5s) reset command to pin 11.
16 No function. Value of this parameter position has no effect.
17 Dead zone for determining the wanted positioning accuracy. If this window value is small the positioning is tended to be done more accurately. If value is too small the application is not capable to exceed this accuracy, and can not find or maintain the set position steadily. In this case the value should be increased.
18 Braking zone value is determined as a percentage of the full movement range. It determines how early driver starts to slow down before reaching the right position. Main rule is that small value for slow applications and high value for fast applications.
19 & 20 Start and stop ramps are used to smoothen the speed and direction changes. The parameter value is the time from 0-100% and from 100%-0 speed.
21 & 22 are for determining the control signal range limits. Value can be given as Volts, 0 to 550 (0 to 5,5V).
The values can also be measured automatically by setting the parameters to value to 551. The card will then measure the range min. and range max. voltages on the POSITION SET input.
Pls. read also the chapter "Control range setting".
23 & 24 Inner (BW) and outer (FW) SW-limits. With these adjustable limits the movement range can be limited to suite the application.
Notice: the forced run will over drive these points.

EM-324-SPF POSITIONING DRIVER 12-24V 4A

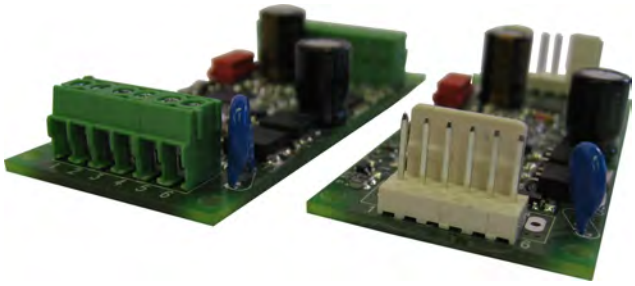

FEATURES

- quadrature pulse counting
- multiple dynamic settings
- solid state power stage
- one or two pulse feedback
- voltage or mA control
- position accuracy max. 0.2%
- versatile setting options
- digitally settable parameters
- housing options available
- 2/16kHz pwm frequncy options
- CE marked product

EM-324-SPF is a positioning driver to be used with DC-motors. The solid state power stage operates with high efficiency and as its realized with FET-transistors. Its literally everlasting compared to relay solutions. Feedback is done with one or two line pulse signal. Although position feedback can be done with one pulse line it is always preferred and more secure to do it with two 0°/90° pulse lines. This driver includes an analog control with three signal ranges, 0-5,5V, 0-11V or 4-20mA. Input is freely scalable inside the range. The max. electrical accuracy of the driver and feedback is 0.2% which is adequate for most actuator positioning applications.

The settings and adjustments are done with parameters as in all new generation Electromen products. Included in the parameters is also the learn routine which will help to determine the full movement range fast and easily. Additively the movement range can be modified from both ends with SW-limit parameters. Possible cumulating pulse count errors can be avoided with manually or automatically triggerable home drive. Current limits and driving speeds can be set individually for both directions. Driver includes also many other dynamic adjustment features like parameter for load compensation, dead-zone setting (positioning window), start and stop ramps for smooth direction change and braking zone for well operating positioning.

The parameter setting and status monitoring is done with EM-236 Interface Unit. With EM-236 the right parameters can also be copied easily to other driver units. The on-board LED-light indicates the possible fault situations with blinking codes. If needed, the fault alarm can be also given out trough combiport (pin. 13). This port can be set as "position OK." output or it can work as an analog position signal output. Additively it can work also as disable input. Device is EMC tested for industrial and household environment and operating temperature range is quite wide. There are also same housing options available for EM-324-SPF driver card as for the standard EM-324.

TECHNICAL DATA

Supply voltage	10-35V
Shut down voltage	8V
Power up voltage	9V
Motor current cont.	4A at 2kHz / 3A at 16kHz mom. 6A (Ta<50°C)
Current limit	0.1-6A (in start max. 8A)
Overtemp. limit	100°C
PWM frequency	2kHz / 16kHz
Pulse sampling rate	0.2ms
Input freq. of pulse lines max	800 Hz
Control input ranges (position)	0-5,5V / 0-11V / 4-20mA
Positioning potentiometer	10k recom. 22k max.
Input resistor for mA-signal	250ohm (socket on board)
Position out. signal range	0-5V or 0.5 - 4.5V, 0V for FAULT
Digital input levels	high =4-30V, low=0-1V
Digital input impedances	typ. 47kohm
Limit-FW / -BW and pulse inputs	imp. typ 10kohm
COMBIPORT pin.13	
- Fault output, NPN, open coll.	max 30V / 1A
- Disable input	Uin < 1V (NPN)
- position output impedance	1kohm
Connectors for motor and supply	max. 2.5mm² cable
Connectors for signals	max. 1mm² cable
Operating temp(Ta)	-40...60°C
Dimensions	72x42x25mm
Weight	80g
CE-tested for household and industrial environment (EMC)	EN-55022B, EN-61000-4-3, -4, -5, -6 passed

EM-324-SPF BLOCK DIAGRAM

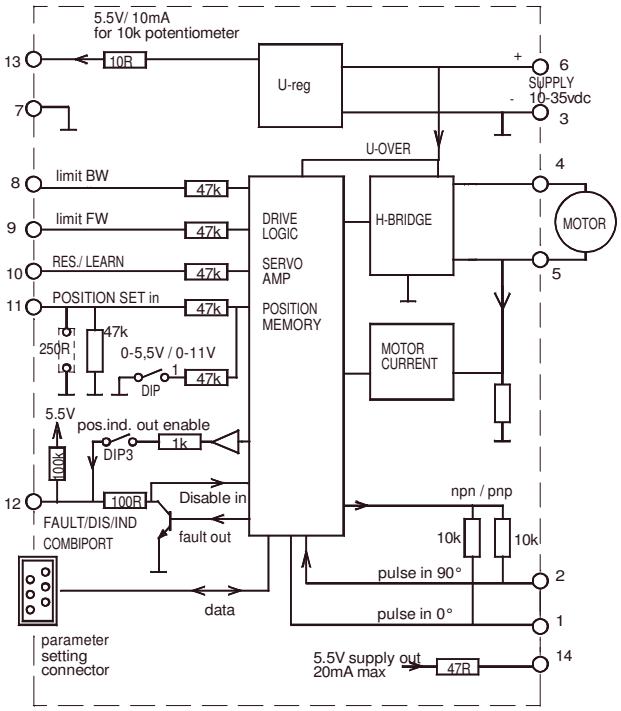

CONNECTION ADVICE

Supply voltage should be in the limits of 10-35Vdc.
Ripple should be lower than 30% even with max. load.
NOTICES !
1. Wrong supply polarity can cause damage the device.
2. There is no inbuilt fuse in this device. Use an external fuse which is chosen according to your application.
3. that function and scale of some of the input and output terminals is depending on the selected parameter values and defined ranges.
Please, see the parameter list and explanations.

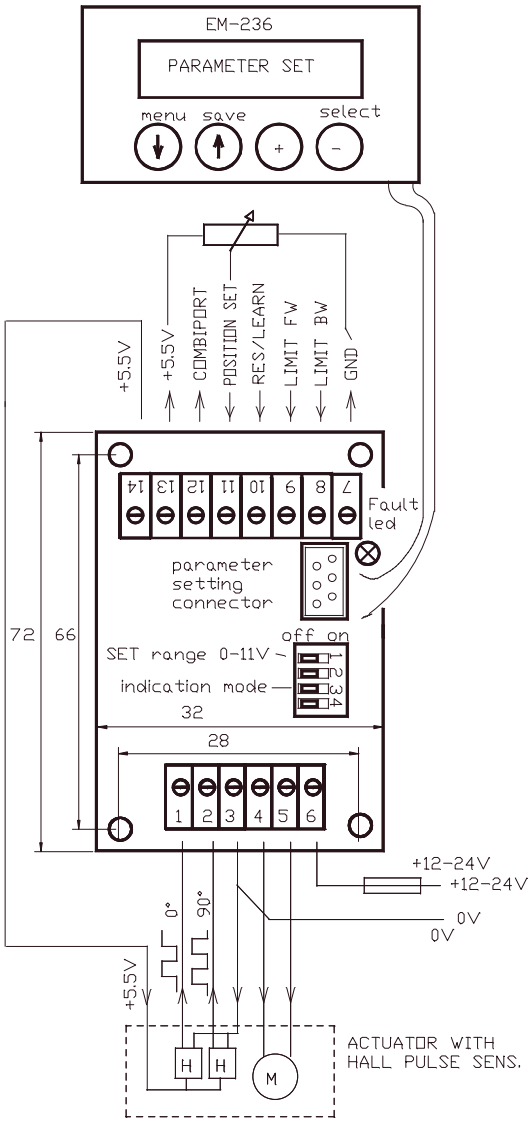

Pulse edges of 1 and 2 pulse lines

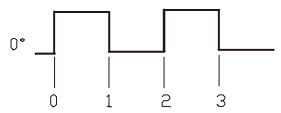

One pulse mode includes
no direction information

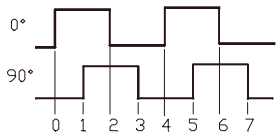

Two pulse,quadrature pulses
offers also the direction information

The setting of the controller is done with parameters, and the parameters can be set and edited with EM-236 Interface Unit. Making changes is easy and precise. Copying the parameters to multible units is simple and accurate. The same parameters that are saved to one unit can be copied to an other unit with one push of a button. After the two first parameters have been set according to the application, the actuator and control wires can be connected and operation can be adjusted with the remaining parameters.

Position feedback
Select 1 or 2 pulselines with parameter 1 according to your application.
The position information has more risk to be corrupted when controller is used with one pulse line, as the signal does not have information about the direction of the movement. For example in fast direction change with difficult loads few pulses are more easily counted to wrong direction.
So it is recommended to use two pulse lines (0° and 90°) when ever available.

Full range
Full range is the full mechanical movement of the linear motor or positioning system. At first it is always needed to determine the full range before it is possible to drive the system. When the full range is determined it is also set to correspond the selected and set control range that can be for example 0-5V. Position feedback is received as pulses, and full range is determined as the number of pulse edges received during the full movement from start to end. If this number is known it can be set as the value of parameter 25 (Full range).

Home run
The position feedback is received as pulses so the driver can not know the righ position before its pulse counter is reset in some known position. Home run command will drive the motor to selected end of the full range and there it will reset the pulse edge counter. Before the positioning can be used the home run must be done. After home run the position is saved to the drivers memory and will be valid even after the power is cut off and restored. Home run is configured with parameter 14, values 1 or 2.

Learn routine
Learning is a special option for finding the full range and taking the system in use with out knowing the number of pulses for full range. Learn routine is selected with par.14 val.7. and started with 5s command to RES/LEARN input. Learn routine will drive the motor forward (FW) untill it reaches the outer end then it starts the motor backwards (BW) and drives to inner end. During this routine the driver "learns" the number of pulse edges for full range and also retrieves the absolute position by resetting the counter in the inner end. After learn routine is done the driver can be used for positioning and par 14 should be set to some suitable value for normal use of the application.
Notice: Learn routine is ran to the hard end (or to the limit switches if wired).
Notice: To see the learned and right number of the full range pulse edges, you have to down load (OK to Load&Edit) the parameters from driver with EM-236 Interface Unit once again. Or if you are wieving the par.25 while learn routine you can try to change the value and the EM-236 Interface unit will first display the learned range. After this its possible to edit this reading.

Auto home
Auto home is an automated home run that is triggered during normal operation when ever the motor is run to the FW or BW end switch or close to the sofware end limit (SW-limit). Well configured auto home can effectively prevent cumulating position error. Its specially useful when working with only one feedback pulse line. Auto home configures with par. 14 (values 3,4,5 or 6).
Notice. The auto-home will be ran to the hard end (or to the limit switches if wired).
If you choose the auto-home triggered from limit switch inputs or SW-limits, the option of using the 5seconds command to RES/LEARN input is also available.

Control range setting
Options for max. ranges are 0 to 5,5V, and 4 to 20mA if you place a 250ohm resistor to the resistor socket on the driver board.
Using 0 to 11V range requires you to set the DIP switch 1 to "ON" position.
Your individual control scale you can either set with parameters 21 and 22 as Volts or you can let the driver to measure your min. and max. control values.
If you choose to set the min. and max. as Volts, pls. notice that the values are in ratio to the lowest range 0-5,50V, and with 0-11V range you have to divide the actual voltage with two. With current signal the right value is I x 250. Eg: 4-20mA = 1,0 - 5,0V.
Most accurate way is to let the driver to measure the values. So first connect and adjust minimum value to set input (pin.12) and change the par.21 to val. 551, after value stops blinking the dispaly shows the measured value. Then adjust the maximum control value to pin.12, and change par.22 to 551. After a while you will see the measured value in display. Always remember to to save with long push to save button, before disconnecting EM-236 and taking power off from the driver.
Notice: If control min. value is set higher than max. value the movement range will be inverted and set accordingly.

Positioning dynamics (continued on the next page)

Dead zone (par.17) is to determine the accuracy of positioning.
This parameter has the major effect to positioning accuracy.
The smaller it is determined the more accurately the positioning is done.
Notice. If it is set too small compared to accuracy level of the mechanics an oscillation or unstability in positioning will occur.

Braking zone (par. 18) is used to optimize the time needed for positioning.
Too high value slows down too early, and too low value will cause an fast position passing and needs a corrective return driving.

Start and stop ramp (par. 19 & 20) are to smoothen the direction change. Often suitable value for stop ramp is half of start ramp. Too long stop ramp can make the direction change too time consuming and too short can cause mechanical stress and non desired agressivity.

Load compensation (par.11) when set to right value, will ensure the needed force to start driving and to taking the load in to the right position. With high load and too low load compensation value, the motor dont have force enough to reach the right position. Start testing with zero value and increase value untill motor behaves unstable and twitching. Thumb rule in this point is to decrease the value with 25%.

Current limits should be set according to the motor nominal max. current or according to the required current of the application (if lower than nom).

Indications
Fault situations are indicated with coded blinking of the red LED.
Fault alarm can be forwarded out trough combiport (pin.13).
Fault situation is reset with a short (<5s) command to RES/LEARN input (pin.11). Some faults are reset automatically with a new position command to opposite direction.
Instead of fault indication the combiport can be set to indicate the status of the positioning as an "on position" output, or it can be set to give an analog position information with 0-5V or 0.5-4.5V signal. Configuration of the combiport is done with par.9. Notice: If it is set to give analog information out (par.9 val3/4), also the DIP-switch 3 should be set to ON position.
If Combiport (pin 13) is selected to be fault output, it will also work as disable input when externally pulled down. If this terminal is selected to be used for indication the "disable in" function can be set and transferred to work trough limit input terminal pin 9 or pin 10 (par.15).

Adjustment and settings
Parameter setting is done with EM-236 Interface Unit, which is connected to a powered driver unit to the red connector.
During the start up routine the Interface Unit will display information about itself and then the name and program version of the target device. Then it will stay on displaying EDIT & LOAD. Pushing the "yes" button will up load and show the parameter list of the controller. Now the user can scroll the parameters with arrows, and make value changes with + and - buttons. Edited value is effective after few seconds when the value stops blinking. But notice, that the change will not be saved untill you give a long push (>2s) to the "save" button. This will save the values to the EM-236s memory also. Now it is easy to copy the same values to an other driver. Just connect the unit to a powered driver and after the start up routine just press a long "save". You can repeat this untill all needed units have been configured.

LIST OF PARAMETERS prog. v1.3 (defaults in parentheses)

1 Feed-back mode : one-pulse=1, dual-pulse=2 (1)
2 Limit and pulse input logic (1)
  1= limit inputs PNP / pulse inputs PNP
  2= limit inputs PNP / pulse inputs NPN
  3= limit inputs PNP inverted / pulse inputs PNP
  4= limit inputs PNP inverted / pulse inputs NPN
3 Speed FW: 20-100% / 0-100 (100)
4 Speed BW: 20-100% / 0-100 (100)
5 Speed HOME/LEARN: 20-100% / 20-100 (60)
6 Current limit out, FW: 0.1-6A / 1-60 (30)
7 Current limit in, BW: 0.1-6A / 1-60 (30)
8 Current trip delay: 0-255ms / 0-255 (100)
  (0 = tripp not in use)
9 Combiport (pin 13) function: 1-4 (1)
  1= used as Fault out / Disable in (fault/dis=0V)
  2= gives the "on position" data (on pos=0V)
  3= gives position info out with 0-5V
  4= gives position info with 0.5-4.5V and fault =0V
10 Over voltage limit: 15-40V / 15-40 (35)
11 Load compensation: 0-255 / 0-255 (0)
12 Time out: 1-255s. / 1-255 (0= not in use) (0)
13 Hour and start counter reset (0)
  set value = 1 and press SAVE -> hour and start counter reset
14 Home run / learn function: 1-7 (1)
  1= Home run with RES / LEARN input to BW direction (>5s. comm.)
  2= Home run with RES / LEARN input to FW direction (>5s. comm.)
  3= Auto-Home from BW LIMIT input to BW direction (pin 9)
  4= Auto-Home from FW LIMIT input to FW direction (pin 10)
  5= Auto-Home triggered with inner soft limit to BW direction
  6= Auto-Home triggered with outer soft limit to FW direction
  7= Learn routine with >5s command to RES /LEARN input (pin.11)
15 Disable input configuration (0)
  0= Disable only to pin.13, 1=disable to pin.10, 2=disable to pin.9
16 Not in use
17 Dead zone : 0,2-5% / 2-50 (10)
18 Braking zone : 1-8% / 1-8 (3)
19 Start ramp : 0.1-2.5s / 0-25 (10)
20 Stop ramp : 0.1-2.5s / 0-25 (3)
21 Set value min: 0...5.50V / 0-551 (0)
22 Set value max: 0...5.50V / 0-551 (550)
  For parameters 21 and 22 value 551 will do an auto setting
23 Inner (BW) SW-limit: 0...+50% / 0-500 (5)
24 Outer (FW) SW-limit: 0...-50% / 0-500 (5)
25 Full range (pulse edges) 100-65535 / 100-65535 (1000)
26 PWM frequency 1 = 2kHz, 2=16kHz (1)

FAULT LED -blinking codes

1. I-trip 1 blink
2. pulse lost 2 blink
3. over temperature 3 blink
4. over voltage 4 blink
5. time out trip 5 blink
6. learn corrupted 6 blink

MONITORABLE VALUES (Can be read with EM-236)

1 fault code (see above) 1-6
2 motor current 0-20A / 0-200
3 target position 0-100,0% (0-1000)
4 realized position 0-100,0% (0-1000)
5 position as pulse edges 0-65535
6 hour counter (max.65535h)
7 start counter (max.65535)
8 start counters over flow counter (max. 65535)

ABOUT PARAMETERS

1. Feedback mode is a mandatory setting to be done according to the application. 1= for one pulse line only, 2= two pulse lines for 0° and 90° pulses.
2. Limit and pulse inputs (pins 9, 10, 2 and 3) can be set to work with positive or negative logic. Signal can be either pulling up =PNP or down to 0V which is often marked as NPN signal.
3 & 4 driving speed to FW (out) and BW (in) directions.
5 The speed setting for "home run" and "learn" routines.
6 & 7 Current limit setting for FW (out) and BW (in) driving directions.
8 Current tripp delay time 1-255ms, if set to 0 the tripp is disabled
9 Combiport configuration (pin 13). This terminal can work as combined input-output. It can be fault output and disable input or an on position indicator giving an "on position" signal after a succesfull positioning. It can also be used to indicate the position with continuous voltage signal 0-5V (val.3) or 0,5-4,5V + 0V fault (val.4).
Notice: With val. 3 or 4, also the DIP3 must be set to "ON" position.
10 Over voltage limit. Motor is switched to free wheel if the selected voltage level is exceed. This saves the driver or other devices in supply line from over voltages in case the motor generates surplus energy during slow down or braking.
This can happen eg. in vehicle or lifting applications.
11 Load compensation (RxI-comp) ensures good torque with low speeds. It is good to start testing with zero value, but if the motor seems weak when starting or slowing down to the right position this value can be increased carefully and step by step.
Notice: Too high value is recognized from oscillation and/or twiching.
12 Time out tripp will cut off the driving if continuous driving to the same direction exceeds the set value (statet in seconds).
13 Usage counter reset parameter is for manual reset of counters. Choosing and saving value 1 will reset the hour and start counters.
14 Home run direction and start condition setting or enabling the learn routine for finding the full movement range.
Home run can allways be started with RES/LEARN input (pin 11).
Auto home can be started with actual limit switch inputs or with so called SW-limits (par. 23 and 24). Last special option (value 7) is for starting the learn routine. That is an end to end drive routine to count and determine the real full movement range.
15 In case the pin.13 is used for indication, the limit switch inputs pin 9 or 10 can be configured to work as disable input.
16 Not in use in this program version.
17 Dead zone is for determining the suitable positioning accuracy. If this positioning window value is small the positioning is tended to be done more accurately. If value is too small compared to the accuracy of the other parts of the application, the system might not be able to work properly. Notice. Other parameters like braking zone and FW/BW speed settings will also affect to the positioning behaviour.
18 Braking zone value is determined as a percentage of the full movement range. It determines how early driver starts to slow down before reaching the right position. Main rule is that small value for slow applications and high value for fast applications.
19 & 20 Start and stop ramps are used to smoothen the speed and direction changes. Its the time from 0-100% or from 100%-0 speed.
21 & 22 are for determining the control signal range limits. Value can be given as Volts, 0 to 550 (0 to 5,5V), or the min. and max. values can be measured automatically by setting value to 551. Then the card will measure the signal in the POSITION SET input. Pls. read also the chapter "Control range setting".
23 & 24 Inner (BW) and outer (FW) SW-limits. With these adjustable limits the movement range can be limited to suite the application. Notice: if either of these SW-limits is used for auto-home (par.14) the motor will drive over the limit when executing the home run.
25 The full-range is determined by setting the known or calculated full range pulse edge count to be the parameter value. Alternatively the value can be defined by making the learn run (par.14 val.7) Notice. The learned pulse edge number is up dated to the EM-236 Interface unit display when you make a new Load & Edit data query or try to change the value right after learn routine.
to change
26 PWM frequeny selection 2khz offer more current and 16kHz gives quiet run.

EM-346 BRUSHLESS DC-MOTOR DRIVER 12-35V 10A

FEATURES

- Three phase output
- Speed and torgue adjustment
- Open/closed loop modes
- Regenerative braking option
- True 4Q-power stage
- Braking resistor output
- Current limit and trip
- Symmetrical control option ±5V or ±10V
- Fault and overcurrent outputs
- Good efficiency
- Low EMC emissions
- DIN-rail mountable
- Rpm-pulse output option

GENERAL

EM-346 is brushless DC-motor driver with hall sensor feedback. The unit has a mosfet power stage with good efficiency and it meets also todays EMC requirements. The driver can be used with 120° commutation. This driver has true 4Q power stage, and it makes possible to use regenerative braking . In this braking method the supply voltage rises, this voltage rising can be controlled with braking resistor. If uses battery supply then the braking energy can be leaded back to battery and braking resistor will not needed.
The unit has the basic digital command inputs like direction, brake, start/stop, disable and there is analog inputs for speed and current control. One digitally presetable second speed (speed-2) is possible to activate with digital command input. EM-346 has two NPN outputs for fault and overcurrent indication use. Some input and output functions can be modified with parameters.
Driver includes overvoltage, undervoltage and overtemperature protections. These fault situations are indicated with fault on-board LED.
Overtemperature and current limit situations can be reset with reset input, reset-timer or by setting analog speed control to value to 0.

There are two control options for speed. Direct control (open loop) sets motor voltage in propotion to control voltage as with a standard DC-motor. Closed loop uses hall sensor feedback for speed control, this mode offers good speed regulation.
Start and stop ramps work in both mode. Speed adjust range, closed loop rpm range and rampse can be set with parameter.
Anolog input are filtered so that there can also use PWM signal for control speed and current.

Setting can be done digitally with EM-236 interface unit or with Emen-Tool lite program installed in PC and EM-268 adapter cable.
Parameters stored into nonvolatile memory of device. This interface unit can also be monitored the current and rpm of motor.

Device can be installed in DIN-rail base and some enclosure options are also available.

TECHNICAL DATA

Supply voltage 12-24V (11-35Vdc)
Overvoltage shut down 40V
Idle current typ. 30mA
Max current 10A cont (Tamb. 40 °C)
Max current peak 25A (max 2s)
Max brake output current 10A
Pwm frequency typ. 16kHz
Overtemperature Temp shut down 90°C
Current limit setting 0.1-25A (step 0.1 A)
Current limit analog scale 0-5V = 0-25A
Logic level of digital inputs
"off" = 0-1V or open / "on"= 4-30V
Input impedance of logic inputs 10k
Response time of digital input 2ms
Analog input range 0-5V up to 0-10V
Input impedance of analog inputs 100k
Input filter of analog input 100Hz
Overcur. and fault outputs NPN max 50mA
EMC measured for industrial and houshold env.
PCB material flammability class UL94V-0
Dimensions 89x73x32mm
Weight 200g

EM-346

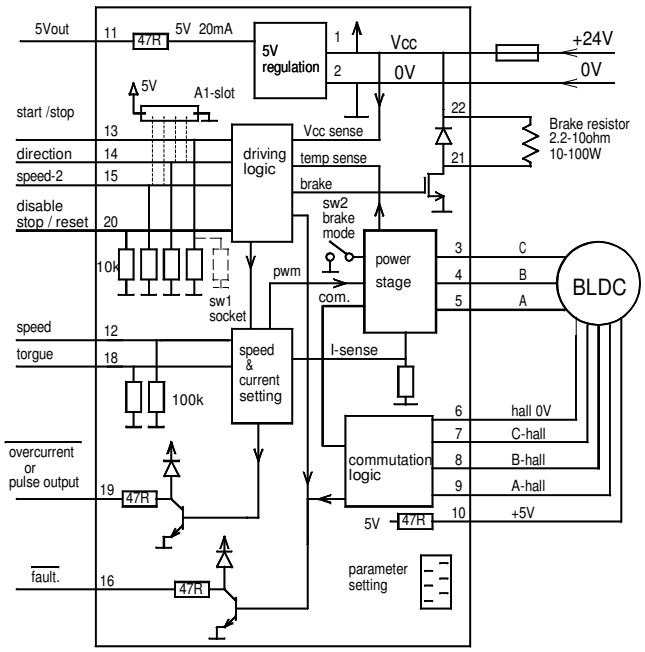

ELECTROMEN Oy www.electromen.com

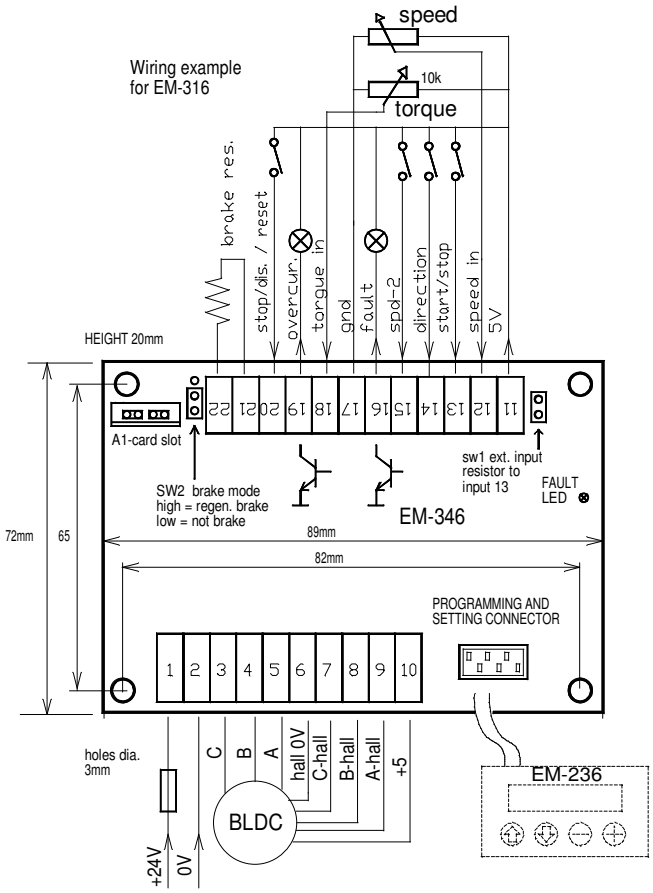

SETTABLE PARAMETERS (prog. 346 v1.0)

EM-346 parameters set with interface unit EM-236 or
with Ementool-Lite and EM-268

1. mode: open loop =0 / closed loop=1 (0)
2. closed loop range 0-4 (3)
   0=30000rpm
   1=15000rpm
   2=9000rpm
   3=5000rpm
   4=3000rpm
3. start ramp 0-5s / 0-50 (1s)
4. stop ramp 0-5s / 0-50 (1s)
5. I-trip delay 1-255ms / 0-255 0=no trip (200ms)
6. scale start speed 0-25.5% / 0-255 (0)
7. scale gain 0-2.55 / 0-255 (200)
8. closed loop dynamic P-factor 1-200 (10)
9. closed loop dynamic I-factor 1-200 (10)
10. braking current limit 1-18A / 1-18 (18)

11. not in use this version 0-2
12. current limit 0-25A / 0.1-250 (40)
    0= current setting with pin 18
13. speed-2 value 0-100% / 0-100 (50)
14. I-trip reset mode (0)
    0= only with disable pin
    1= with speed input change 0 to up
    2 = with direction input
    10-200 = timer reset 1-20s. (0)
15 Over temp reset mode (0)
    0= only with disable input
    1 = with speed input change 0 to up
    2 = 10-200 timer reset 1-20s.
16 I-trip indication (0)
    0 = I-trip indication to pin16
    1 = No I trip indication to pin 16 or 19
    2 = I-trip indication to pin 19
    3 = pin 19 reserved only for I-trip indication
17 pulse output for pin19 0-5 (0)
    0 = not in use = pin 19 set with parameter 16)
    1 = 3pulse/round (possible only when param 2 is 2,3 or 4)
    2 = 1pulse/round
    3 = 1pulse/ 2round
    4 = 1pulse/ 3round
    5 = 1pulse/ 6round
18. brake res. treshold (=overvoltage) 15-50V / 15-50 (36)

MONITOR VALUES

1. current 0-25A / 0-250
2. braking current 0-18A / 0-180
3. hall rpm 0-1000 / 0-1000Hz

TAKE IN USE

Operating voltage 12-35Vdc ripple less than 20%
An external supply fuse is recommended (2-16A)

Be sharp when connect motor wires, because there is lot of combination. If motor takes much current or run roughly then change wiring.

Default settings are in brackets in parameter list. This are good start-up values

In example picture beside there all input connected, but device work also with less wiring. So connect only needed functions.

Overcurrent and fault outputs are NPN type, and pull when activates, This could also connect to PNP input if uses 2.2k external pull up resistor

Speed adjusting input range can be set with parameter 6 and 7. see picture below

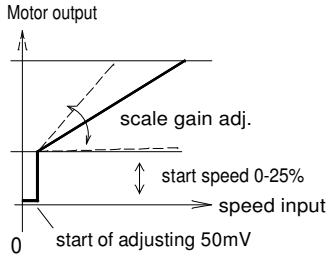

In some application load can be generated energy back to drive, when slowing down speed. Then there needed braking resistor, which absorbed extra energy. NOTICE that the parameter 18 has to be set about 10% higher than unloaded voltage of power supply.
If uses battery supply, then braking resistor would not needed.

If needed symmetrical control ±5V or ±10V the, then can be added EM-A1 auxliary card into A1 slot. Normally this slot has to be to jumpers pin 2 to3 and pin 4 to 5

CONTROL INPUTS

Speed input is a analog control input for speed setting.
Set signal can be between 0-5V and 0-10V
Speed scaling can be made with parameter 6 and 7.

Torgue input is analog input for current limit setting.
0-5V signal to 0-25A current. (if parameter 12 is =0)
If parameter value is something else than zero, then current limit is then = parameter value + analog input value.

Analog inputs above can also control with PWM signal.
Recommended PWM frequency is over 400Hz.

Start/stop input must be set "high " (>4V) to start motor
If this in put is low or open, then the would not start.

Direction input is a digital input. It will change the rotation direction. It uses automatically stop/start ramps during change.

Speed-2 input is a digital input which. enables speed-2, Speed presetted with parameter 13.

Stop/ disable input is a digital input, which disabled driver Motor goes to freewheeling (all poles floating). This input can be set to work also as reset with parameter 14 and 15
This input has highest priority.

INDICATIONS.

Fault led:
Fast blinking = I-trip or overvoltage
Random blinking = current limit
Continuous = overtemp, disable input "on",

Fault output: (Pin-16 PNP open collector output)
Overtemperature, Overvoltage, Undervoltage.
This indicates also I-Trip if parameter 16 is set to = 0

Overcurrent output : (pin-19 PNP open collector out)
This output indicates when current limit is exceeded.
- if parameter 16 is set to =2 then it indicates also I-trip
- if parameter 16 is set to =3 then it indicates only I-trip

EM-347 BRUSHLESS DC-MOTOR DRIVER 12-36V 40A

FEATURES

- Three phase output
- Speed and torgue adjustment
- Open/closed loop modes
- Dynamic braking
- Control output for cooling fan.
- True 4Q-power stage
- Braking resistor output
- Selectable brake mode
- Current limit and trip
- Symmetrical control option ±5V or ±10V
- Fault and overcurrent outputs
- Good efficiency
- Low EMC emissions
- DIN-rail mountable
- Rpm-pulse output option

GENERAL

EM-347 is brushless DC-motor driver with hall sensor feedback. The unit has a mosfet power stage with good efficiency and it also meets todays EMC requirements. The driver can be used with 120° or 60° commutation. This driver has true 4Q power stage, and it makes possible to use regenerative braking. In this braking method the supply voltage rises at braking. The voltage rising can be controlled with braking resistor. If uses battery supply then the braking energy can be leaded back to the battery and braking resistor will not be required. The unit has the basic digital command inputs like direction, brake, start/stop, disable and there is analog inputs for speed and current control. One digitally presetable second speed (speed-2) is possible to activate with digital command input. EM-347 has two NPN outputs for fault and overcurrent indication use. Some input and output functions can be modified with parameters. Driver includes overvoltage, undervoltage and overtemperature protections. These fault situations are indicated with fault on-board LED. Overtemperature and current limit situations can be reset with reset input, reset-timer or by setting analog speed control to value to 0.

There are two control options for speed. Direct control (open loop) sets motor voltage in propotion to control voltage as with a standard DC-motor. Closed loop uses hall sensor feedback for speed control, this mode offers good speed regulation. Start and stop ramps work in both mode. Speed adjust range, closed loop rpm range and rampse can be set with parameter. Analog input are filtered so that there can used also PWM signal for control speed and current.

Setting can be done digitally with EM-236 interface unit or with Emen-Tool lite program installed in PC and EM-268 or EM-328 adapter cable. Parameters stored into nonvolatile memory of device. This interface unit can also be monitored the current and rpm of motor. Device has also output for cooling fan, it can be controlled optional fan if needed. This output switch on fan, when temperature rises over 65 deg.

Device can be installed in DIN-rail base and some enclosure options are also available.

TECHNICAL DATA

Supply voltage 12-36V (11-42Vdc)
Overvoltage limit 15-65V (adjustable)
Idle current typ. 30mA
Max current 40A cont (Tamb. 50 °C)
Max current 50A cont. with fan cooling
Max current peak 100A (max 2s)
Max brake output current 25A
Brake resistor recom.value 1-10ohm
Pwm frequency typ. 16kHz (2kHz option)
Overtemperature shut down 90°C
Fan output switch on > 65°C
Current limit setting 1-100A (step 1 A)
Current limit analog scale 0-5V = 0-100A
Logic level of digital inputs
"off" = 0-1V or open / "on"= 4-30V
Input impedance of logic inputs 10k
Response time of digital input 2ms
Analog input range 0-5V up to 0-10V
Input impedance of analog inputs 100k
Input filter of analog input 100Hz
Overcur. and fault outputs NPN max 50mA
Output for fan cooling 12V max. 100mA
EMC measured for industrial envinronment
PCB material flammability class UL94V-0
Dimensions 140x122x50mm
Weight 650g

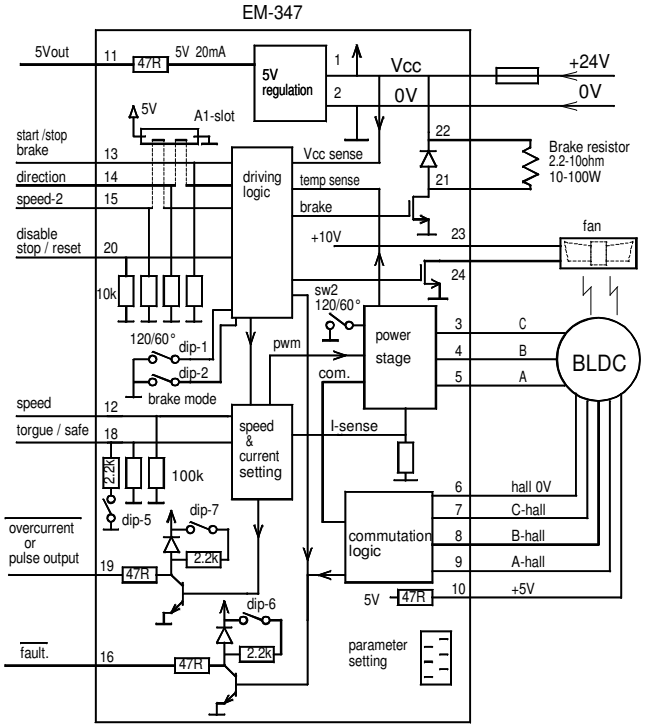

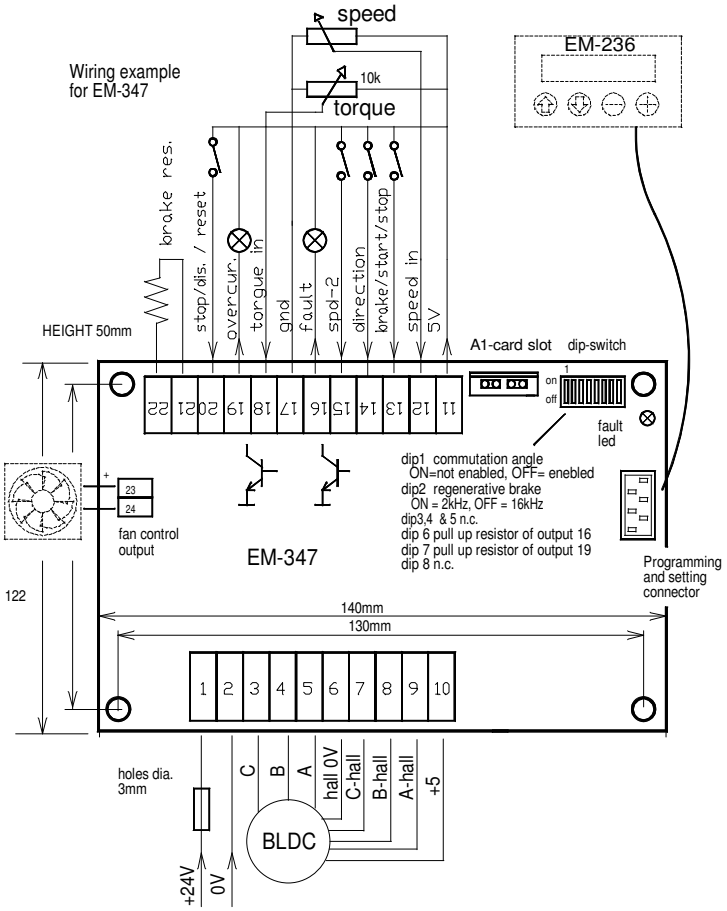

SETTABLE PARAMETERS (prog. 347 v1.3)

EM-347 parameters set with interface unit EM-236 or
with Ementool-Lite and EM-268

1. mode: open loop =0 / closed loop=1 (0)
2. closed loop range 0-4 (3)
   0=30000rpm
   1=15000rpm
   2=9000rpm
   3=5000rpm
   4=3000rpm
3. start ramp 0-5s / 0-50 (1s)
4. stop ramp 0-5s / 0-50 (1s)
5. I-trip delay 0.01-2.5s / 0-255 0=no trip (0.2s)
6. scale start speed 0-25.5% / 0-255 (0)
7. scale gain 0-2.55 / 0-255 (200)
8. closed loop dynamic P-factor 1-200 (10)
9. closed loop dynamic I-factor 1-200 (10)
10. braking current limit 10-50A / 10-50 (50)

11. pin 13 input mode
    0 = start / stop ramp/brake (speed-2 with brake)
    1= start / stop with ramp
    2= start / stop with braking
12. current limit 0-100A / 1-100 (40)
    0= current setting with pin 18
13. speed-2 value 0-100% / 0-100 (50)
14. I-trip reset mode (0)
    0= only with disable pin
    1= with speed input change 0 to up
    2 = with direction input
    10-200 = timer reset 1-20s. (0)
15 Over temp reset mode (0)
    0= only with disable input
    1 = with speed input change 0 to up
    2 = 10-200 timer reset 1-20s.
16 I-trip indication (0)
    0 = I-trip indication to pin16
    1 = No I trip indication to pin 16 or 19
    2 = I-trip indication to pin 19
    3 = pin 19 reserved only for I-trip indication
17 pulse output for pin19 0-5 (0)
    0 = not in use = pin 19 set with parameter 16)
    1 = 3pulse/round (possible only when param 2 is 2,3 or 4)
    2 = 1pulse/round
    3 = 1pulse/ 2round
    4 = 1pulse/ 3round
    5 = 1pulse/ 6round
18. brake res. treshold (=overvoltage) 15-65V / 15-65 (36)

MONITOR VALUES

1. current 0-250A / 0-250
2. braking current 0-250A / 0-250
3. hall freq. 0-1000 / 0-1000Hz

TAKE IN USE

Operating voltage 12-36Vdc ripple less than 20% (abs. max 42Vdc)
An external supply fuse is recommended (10-60A)

Be carefully when connect motor wires, because there is lot of combination.
If motor takes much current or run roughly then change wiring.

Default settings are in brackets in parameter list. These are good start-up values

In example picture beside there all input connected, but device work also with less wiring. So connect only needed functions.

Overcurrent and fault outputs are NPN type, and pull when activates, This could also connect to PNP input if uses 2.2k external pull up resistor

In high power application there can be installed DC-fan into driver to improve cooling. Driver has own connector for fan, This output offer regulated DC- voltage (12V). This output will activate when driver temperature exceed 65°C.

Speed adjusting input range can be set with parameter
6 and 7. see picture below

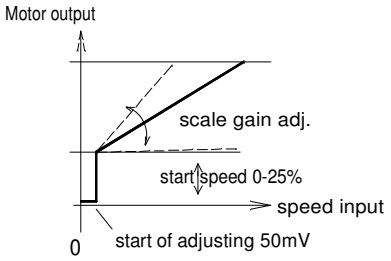

In some application the load can generate energy back to drive, when slowing down speed. In this case you need braking resistor, which absorbed extra energy. NOTICE that the parameter 18 has to be set about 10% higher than unloaded voltage of power supply.
If using battery supply, then braking resistor would not needed.

If symmetrical control is needed (±5V or ±10V), then can be added EM-A1 auxliary card into A1 slot. Normally this slot has to be to jumpers pin 2 to3 and pin 4 to 5

CONTROL INPUTS

Speed input is a analog control input for speed setting.
Set signal can be between 0-5V and 0-10V
Speed scaling can be made with parameter 6 and 7.

Torgue input is analog input for current limit setting.
0-5V signal to 0-25A current. (if parameter 12 is =0)
If parameter value is something else than zero, then current limit is then = parameter value + analog input value.

Analog inputs above can also control with PWM signal.
Recommended PWM frequency is over 400Hz.

Brake input is a digital input. Normally this actives brake function. It means that motor poles shorted and speed set to zero. But this input can be set to work also as start/stop input. Input functions can be set with parameter 11.
In start/stop mode the start work with positive command.
NOTICE ! Current limit doesn't limit braking current, so it is not recommend to use this for long and high inertia braking.

Direction input is a digital input. It will change the rotation direction. It uses automatically stop/start ramps during change.

Speed-2 input is a digital input which. enables speed-2, Speed presetted with parameter 13.

Stop/ disable input is a digital input, which disabled driver Motor goes to freewheeling (all poles floating). This input can be set to work also as reset with parameter 14 and 15
This input has highest priority.

INDICATIONS.

Fault led:
Fast blinking = I-trip or overvoltage
Random blinking = current limit, braking current limit.
Continuous = overtemp, disable input "on", undervoltage

Fault output: (Pin-16 PNP open collector output)
Overtemperature, Overvoltage, Undervoltage.
This indicates also I-Trip if parameter 16 is set to = 0

Overcurrent output : (pin-19 PNP open collector out)
This output indicates when current limit is exceeded.
- if parameter 16 is set to =2 then it indicates also I-trip
- if parameter 16 is set to =3 then it indicates only I-trip

EM-347-48V BRUSHLESS DC-MOTOR DRIVER 24-48V 30A

FEATURES

- Three phase output
- Speed and torgue adjustment
- Open/closed loop modes
- Dynamic braking
- Control output for cooling fan.
- True 4Q-power stage
- Braking resistor output
- Selectable brake mode
- Current limit and trip
- Symmetrical control option ±5V or ±10V
- Fault and overcurrent outputs
- Good efficiency
- Low EMC emissions
- DIN-rail mountable
- Rpm-pulse output option

GENERAL

EM-347-48V is brushless DC-motor driver with hall sensor feedback. The unit has a mosfet power stage with good efficiency and it meets also todays EMC requirements. The driver can be used with 120° or 60° commutation. This driver has true 4Q power stage, and it makes possible to use regenerative braking. In this braking method the supply voltage rises, this voltage rising can be controlled with braking resistor. If uses battery supply then the braking energy can be leaded back to battery and braking resistor will not needed.
The unit has the basic digital command inputs like direction, brake, start/stop, disable and there is analog inputs for speed and current control. One digitally presetable second speed (speed-2) is possible to activate with digital command input. EM-316 has two NPN outputs for fault and overcurrent indication use. Some input and output functions can be modified with parameters.
Driver includes overvoltage, undervoltage and overtemperature protections. These fault situations are indicated with fault on-board LED.
Overtemperature and current limit situations can be reset with reset input, reset-timer or by setting analog speed control to value to 0.

There are two control options for speed. Direct control (open loop) sets motor voltage in propotion to control voltage as with a standard DC-motor. Closed loop uses hall sensor feedback for speed control, this mode offers good speed regulation.
Start and stop ramps work in both mode. Speed adjust range, closed loop rpm range and rampse can be set with parameter.
Anolog input are filtered so that there can also use PWM signal for control speed and current.

Setting can be done digitally with EM-236 interface unit or with Emen-Tool lite program installed in PC and EM-268 adapter cable.
Parameters stored into nonvolatile memory of device. This interface unit can also be monitored the current and rpm of motor.
Device has also output for cooling fan, it can be controlled optional fan if needed.
This output switch on fan, when temperature rises over 65 deg.

Device can be installed in DIN-rail base and some enclosure options are also available.

TECHNICAL DATA

Supply voltage 24-48V (15-60Vdc)
Overvoltage limit 15-65V (adjustable)
Idle current typ. 30mA
Max current 30A cont (Tamb. 50 °C)
Max current 40A cont. with fan cooling
Max current peak 80A (max 2s)
Max brake output (pin-21) current 20A
Brake resistor recom.value 1.5-10ohm
Pwm frequency typ. 16kHz
Overtemperature shut down 90°C
Fan output switch on > 65°C
Current limit setting 1-100A (step 1 A)
Current limit analog scale 0-5V = 0-100A
Logic level of digital inputs
"off" = 0-1V or open / "on"= 4-30V
Input impedance of logic inputs 10k
Response time of digital input 2ms
Analog input range 0-5V up to 0-10V
Input impedance of analog inputs 100k
Input filter of analog input 100Hz
Overcur. and fault outputs NPN max 50mA
Output for fan cooling 12V max. 100mA
EMC measured for industrial envinronment
PCB material flammability class UL94V-0
Dimensions 140x122x50mm
Weight 650g

EM-347-48V

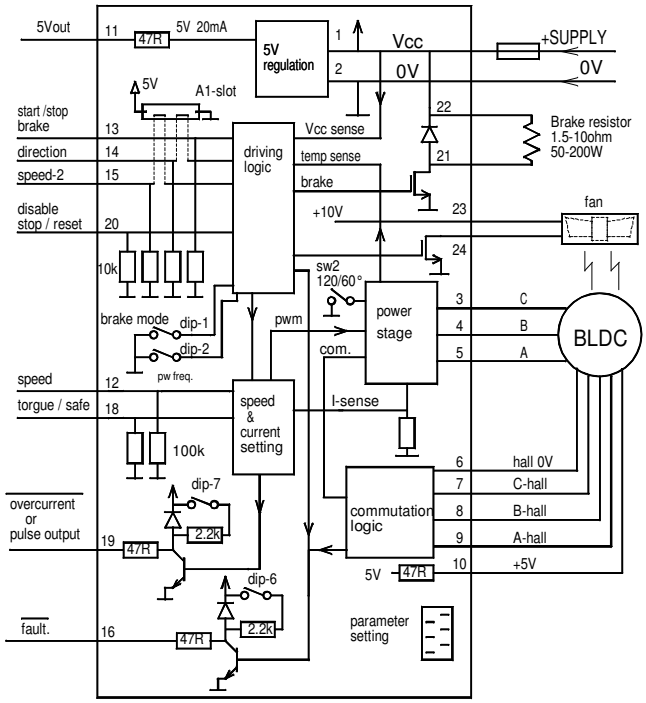

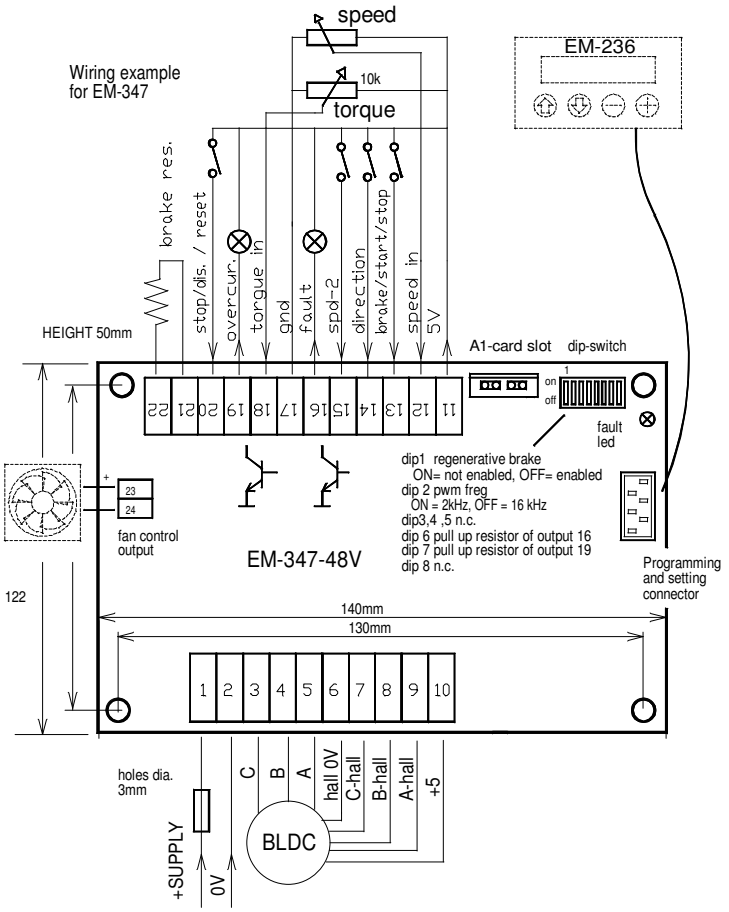

SETTABLE PARAMETERS (prog. 347 v1.3)

EM-347 parameters set with interface unit EM-236 or
with Ementool-Lite and EM-268

1. mode: open loop =0 / closed loop=1 (0)
2. closed loop range 0-4 (3)
   0=30000rpm
   1=15000rpm
   2=9000rpm
   3=5000rpm
   4=3000rpm
3. start ramp 0-5s / 0-50 (1s)
4. stop ramp 0-5s / 0-50 (1s)
5. I-trip delay 0.01-2,5s / 0-255 0=no trip (0.2s)
6. scale start speed 0-25.5% / 0-255 (0)
7. scale gain 0-2.55 / 0-255 (200)
8. closed loop dynamic P-factor 1-200 (10)
9. closed loop dynamic I-factor 1-200 (10)
10. braking current limit 10-50A / 10-50 (50)

11. pin 13 input mode
    0 = brake
    1= start / stop
    2= start / brake
12. current limit 0-100A / 1-100 (40)
    0= current setting with pin 18
13. speed-2 value 0-100% / 0-100 (50)
14. I-trip reset mode (0)
    0= only with disable pin
    1= with speed input change 0 to up
    2 = with direction input
    10-200 = timer reset 1-20s. (0)
15 Over temp reset mode (0)
    0= only with disable input
    1 = with speed input change 0 to up
    and values 10-200 timer reset 1-20s.
16 I-trip indication (0)
    0 = I-trip indication to pin16
    1 = No I trip indication to pin 16 or 19
    2 = I-trip indication to pin 19
    3 = pin 19 reserved only for I-trip indication
17 pulse output for pin19 0-5 (0)
    0 = not in use = pin 19 set with parameter 16)
    1 = 3pulse/round (possible only when param 2 is 2,3 or 4)
    2 = 1pulse/round
    3 = 1pulse/ 2round
    4 = 1pulse/ 3round
    5 = 1pulse/ 6round
18. brake res. treshold (=overvoltage) 15-65V / 15-65 (60)

MONITOR VALUES

1. current 0-250A / 0-250
2. braking current 0-250A / 0-250
3. hall freq. 0-1000 / 0-1000Hz

TAKE IN USE

Nominal supply voltage 24-48Vdc, ripple repetative peak max.63V
An external supply fuse is recommended (10-60A)

Be sharp when connect motor wires, because there is lot of combination.
If motor takes much current or run roughly then change wiring.

Default settings are in brackets in parameter list.This are good start-up values

In example picture beside there all input connected, but device work also with less wiring. So connect only needed functions.

Overcurrent and fault outputs are NPN type, and pull when activates, This could also connect to PNP input if uses 2.2k external pull up resistor

In high power application thee can be installad DC-fan in driver to improve cooling. Driver has own connector for fan, This output offer regulated DC- voltage (12V). This output will activate when driver temperature exceed 65℃.

Speed adjusting input range can be set with parameter
6 and 7. see picture below

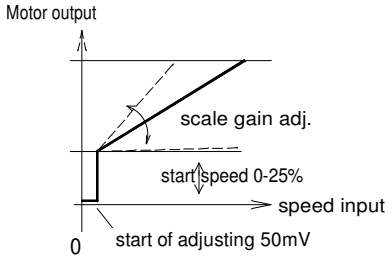

In some application load can be generated energy back to drive, when slowing down speed. Then there needed braking resistor, which absorbed extra energy. NOTICE that the parameter 18 has to be set about 10% higher than unloaded voltage of power supply.
If uses battery supply, then braking resistor would not needed.

If needed symmetrical control ±5V or ±10V the, then can be added EM-A1 auxliary card into A1 slot. Normally this slot has to be to jumpers pin 2 to3 and pin 4 to 5

CONTROL INPUTS

Speed input is a analog control input for speed setting.
Set signal can be between 0-5V and 0-10V
Speed scaling can be made with parameter 6 and 7.

Torque input is analog input for current limit setting.
0-5V signal to 0-25A current. (if parameter 12 is =0)
If parameter value is something else than zero, then current limit is then = parameter value + analog input value.

Analog inputs above can also control with PWM signal.
Recommended PWM frequency is over 400Hz.

Brake input is a digital input. Normally this actives brake function. It means that motor poles shorted and speed set to zero. But this input can be set to work also as start/stop input. Input functions can be set with parameter 11.
In start/stop mode the start work with positive command.
NOTICE ! Current limit doesn't limit braking current, so it is not recommend to use this for long and high inertia braking.

Direction input is a digital input. It will change the rotation direction. It uses automatically stop/start ramps during change.

Speed-2 input is a digital input which. enables speed-2, Speed presetted with parameter 13.

Stop/ disable input is a digital input, which disabled driver Motor goes to freewheeling (all poles floating). This input can be set to work also as reset with parameter 14 and 15
This input has highest priority.

INDICATIONS.

Fault led:
Fast blinking = I-trip or overvoltage
Random blinking = current limit, braking current limit
Continuous = overtemp, disable input "on", undervoltage

Fault output: (Pin-16 PNP open collector output)
Overtemperature, Overvoltage, Undervoltage.
This indicates also I-Trip if parameter 16 is set to = 0

Overcurrent output : (pin-19 PNP open collector out)
This output indicates when current limit is exceeded.
- if parameter 16 is set to =2 then it indicates also I-trip
- if parameter 16 is set to =3 then it indicates only I-trip

GENERAL

EM-A24 is a DC-motor driver module, It's based on EM-241 driver card. This module is PCB mountable and it needs a very small pcb area, because it will be installed vertically. This module has effective H-bridge power stage. The power stage has low EMC emission and it can meet EMC directives for industry and household enviroments without external components. This big benefit when integrated this module to the "motherboard". Module has two pwm frequency option 2kHz offer more current, and 16kHz is noiseless.

There is available various firmware version for this module This version EM-A24C-JS1 is specially for joystick use, and included for example three point calibration. Firmware includes also many basic features for dc motor driver, like current limits, stop and start ramps, and load compensation. The settings of device can be done digitally with parameters. Firmware update can be done also with Ementool interface unit.

INSTALLATION

Supply voltage must be filtered DC of 10-35V, and ripple should be less than 30% at full load.

NOTIFICATIONS !
-Wrong polarity can be damage the unit.
-Module doesn't have an internal fuse, so an external fuse should be added if a fuse is required.
-Module needs two external capacitors
1000uF 35V near to supply pins
470uF 6.3V for 5V output
-If use 5.5V out for sensor voltage notice that max load is 10mA

ADJUSTMENT AND SETTINGS

Adjusting and parameter setting of eg. current limit value, ramp times and speed-2 value can be done with various EM-interface units EM-236 is the basic parameter setting device. EM-268 and EM- 328 are USB-serial converters, which makes possible to set parameters also with computer where is installed EmenTool Lite program. EM-326 is Bluetooth -dongle which can be used in smart devices with the EmenTool App.

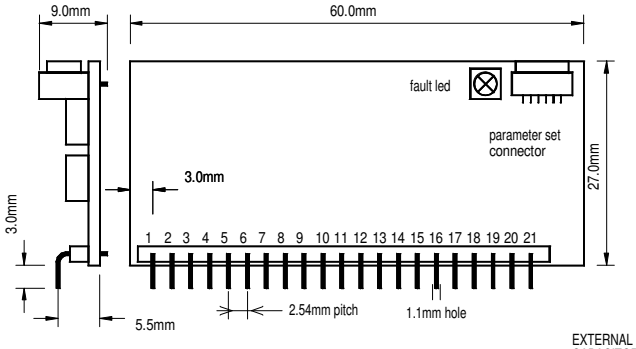

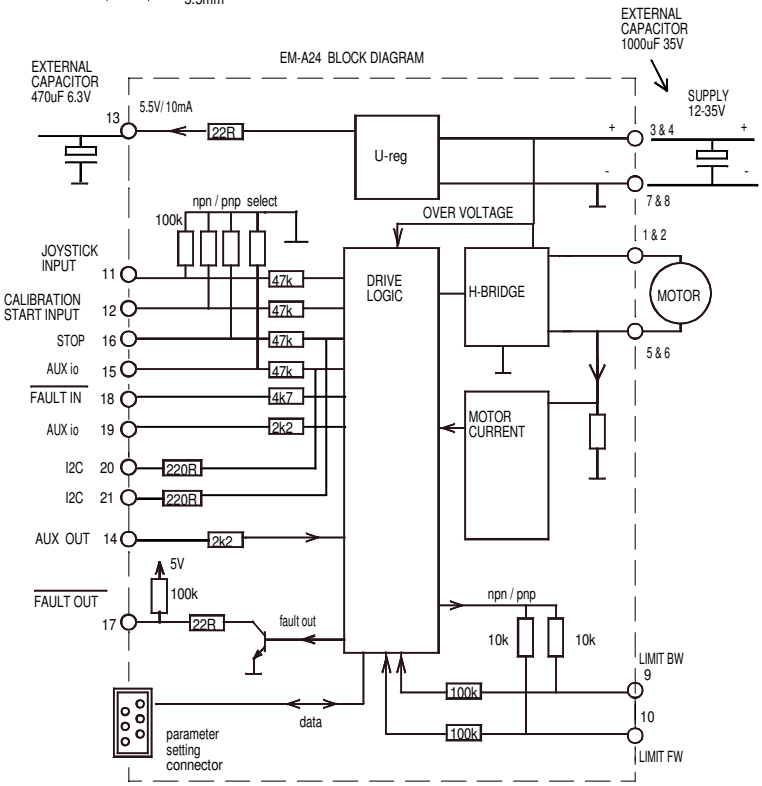

PARAMETERS for prog. ver. EM-A24C-JS1 v1.0 (defaults in brackets)

1- not in use
2- not in use
3- input logic for limit inputs 1 or 2 PNP/NPN (1)
1= limit inputs PNP 2= limit input NPN
4- max. speed FW. 0-100% / 0-100 (100)
5- max. speed REV. 0-100% / 0-100 (100)
6- current limit FW. 0.1-20A / 1-200 (30)
7- current limit REV. 0.1-20A / 1-200 (30)
8- current trip 0= disabled, 1= enabled : (1)
9- not in use
10- Fault output combinations: 0-2 (1)
0= overtemp, current trip. overvoltage
1= as above + calibration indication
2= current limit indication
NOTICE ! fault input is disabled in setting 2
11- overvoltage limit: 15-40V / 15-40 (35)
Overvoltage can be caused by load driving the motor or when braking the speed down but supply cannot accept the current back from driver. Exceeding the limit will cause the power stage set to free-wheel state.
With a direct battery supply the brake current is charging the battery and the voltage will not normally rise.
There is also 40V fixed dynamic brake point = motor pole shorted
12- load compensation: 0-255 / 0-255 (0)
Load compensation (RxI) improves low speed and start torgue, but too high compensation will achieve unstable running.
Run motor at low speed (30%) Increase compensation with small steps until motor start behaviour becomes unstable, then decrease value about 10%
13- timeout: 0-255s. / 0-255 (0=not in use) (0)
14- reset for start and hour-counter 0/1 (0)
selecting 1 and push SAVE => reset counters
15- start ramp: 0-5s / 0-500 (50)
16- stop ramp: 0-5s / 0-500 (20)
17- start-kick 0-200ms / 0-200 (0)
This gives full drive at start and I-lim is 30A
The start kick length is 0-200ms.
18- Dead band wide 0-50% / 0-50 (5)
19- Freewheel options 0-3 (0)
0= no freewheel
1= freewheel when stopped
2= freewheel during stop ramp.
3= freewheel during stop ramp and if stopped
20- Pwm frequency 1=2kHz / 2=16kHz

FAULT-LED signal codes

1. power on	one blink
2. current on limit	led is lit
3. current trip	fast blinking...
4. zero-cur trip	long blink- short pause...
5. overvoltage	4 x blink -pause...
6. overheat	short blink- long pause...
7. timeout	3 x blink + long blink...
8. fault input	2 x short + 1x long blink...

Special codes for calibration mode
solid light = calibration can be done
blink light = calibration is done

MONITORABLE VALUES

1/6 Motor current 0-20A (0-200)
2/6 PWM-level-% 0-100% (0-100)
3/6 hour counter (max.65535h)
4/6 start counter (max.65535)
5/6 carry counter for start counter
6/6 joystick position 0-1024

TECHNICAL DATA (prog ver. EM-A24C-JS1 v1.0)

Supply voltage cont. max. 10-35V
Overvoltage limit adjustable 15-40V (connect motor to freewheel)
Overvoltage dynamic brake 40V (shorting motor poles)
Start up voltage 9V, shutdown voltage 8V
Continuous current output when ambient temp. is < 50℃
12A at 100% speed / 7A at 5-99% speed (pwm freq. 2kHz)
8A at 100%speed / 4A at 5-99% speed (pwm freg 16kHz)
Peak current (5s.) 30A at 2kHz / 25A at 16khz
Current limit adjustable 0.1-25A (at start max. 30A)
Overheat limit 100℃
Start and stop ramp adjustable 0-5s
PWM frequency 2kHz / 16kHz (selectable)
Joystick input scale 0-5V
Input control logic: high =4-30V, low=0-1V
Control input impedances typ. 47kohm
Limit FW / BW input imped. typ 10kohm
Control input response time typ 5ms.
Fault out. NPN open coll. max 30V / 50mA
Fault in actives Uin < 1V (NPN)
Motor and supply connectors 2.5mm
Control connectors 1mm
Dimensions 42x72x25mm
Dimensions in DIN-rail base 45x80x45mm
CE-tested for industrial environment (emc)
Operating temp (Ta) -40...60℃
Weight 75g

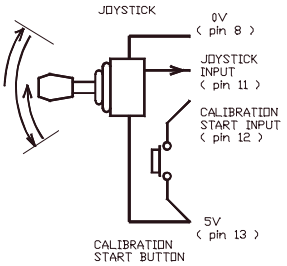

JOYSTICK CALIBRATION

Give about 3s. control signal to CALIB input. when Fault-led of device will be lit:
-push joystick full forward, then
-pull joystick full reverse, then
-release joystick to mid position, then
-wait until led start to blink = calibration done

NOTICE ! calibration above defines joystick full fw, full rev. and mid point positions. But the max. speed can be set with parameters 4 and 5

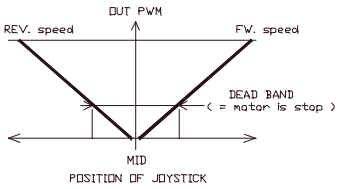

COMPANY		
ELECTROMEN OY		
DRAWN	DATE	TITLE
K.M.K	2.6.16	DATASHEET EM-A24 DC-MOTOR DRIVER MODULE

ACCESSORIES / ENCLOSURES

ELECTROMEN

EM-328 INTERFACE UNIT SERIES
"dongle" for EmenTool Lite

EM-328
"basic"

EM-328-ISO
isolated for
industrial use

EM-328A
"low cost"

FEATURES

- USB to serial converter
- EmenTool Lite compatible
- Three different choices
- Power supply to the target device
- Galvanic isolation version (-ISO)
- Low cost version (A)
- Replaces earlier dongle EM-268
- Link cable length 1m
- Replaceable link cable (not in -A)

TEHNICAL DATA

Operating voltage 5V from USB socket
Max. output current to 100mA
Compatible up to USB 3.0
Isolation 500V (only in -ISO version)

The EM-328 interface unit series is designed to convert USB port signal to serial port of EM-devices.
EM-328 series has been designed to be used with EmenTool Lite PC program, which can be downloaded free from Electromen website. (www.electromen.com -> download area -> software).
This device can be used to supply 5V voltage to the target device.
There are three option available. The standard version is EM-328 and it is basic converter.
EM-328 series replaces earlier dongle device, which type is EM-268
EM-328-ISO is an isolated version, this has isolated signal and power supply path.
This version is recommended to use in industrial environment with a lot of interference.
EM-328A is so called low cost version, this one has same electrical features as the basic version, but has been made mechanically more economical.

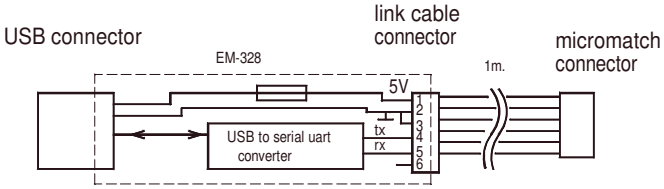

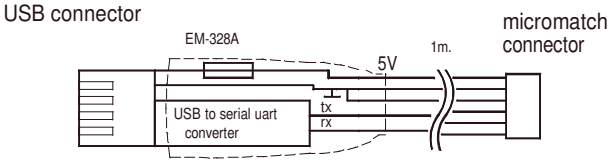

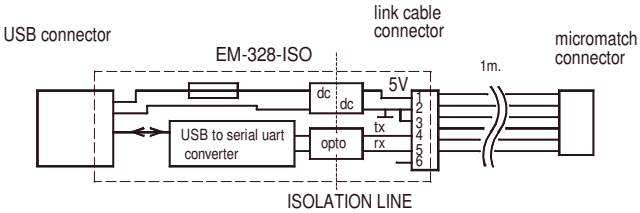

EMENTOOL LITE v1.0
User interface for EM-products

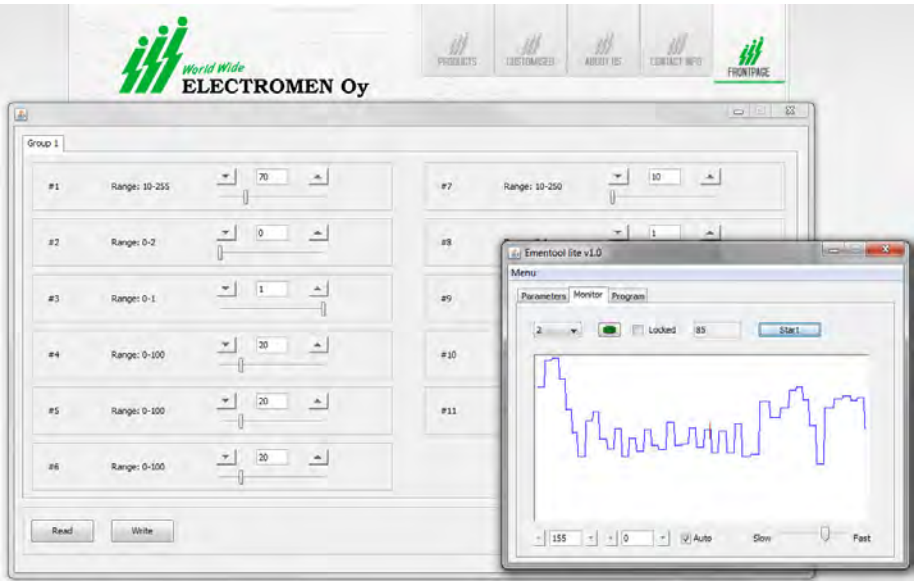

-parameter setting
-monitoring
-program update
-freeware

Ementool Lite program can be used to set Electromen products and for program updates. The program has three main views: setting of the parameters, monitoring, and program update. The target device is then plugged to a computer normally by using a EM-268 USB adapter.

INSTALLATION
In order for the program to work, the computer must have a Java software installed which is already installed in most windows computers. If necessary it can be downloaded and installed freely from www.java.com.

1. Plug EM-268 adapter to the computer
2. Download the program http://www.electromen.com/EmentoolLite/EmentoolLiteInstall_v1.0.jar
3. Open/run *EmentoolLiteInstall_v1.0.jar* and install according to program's instructions.

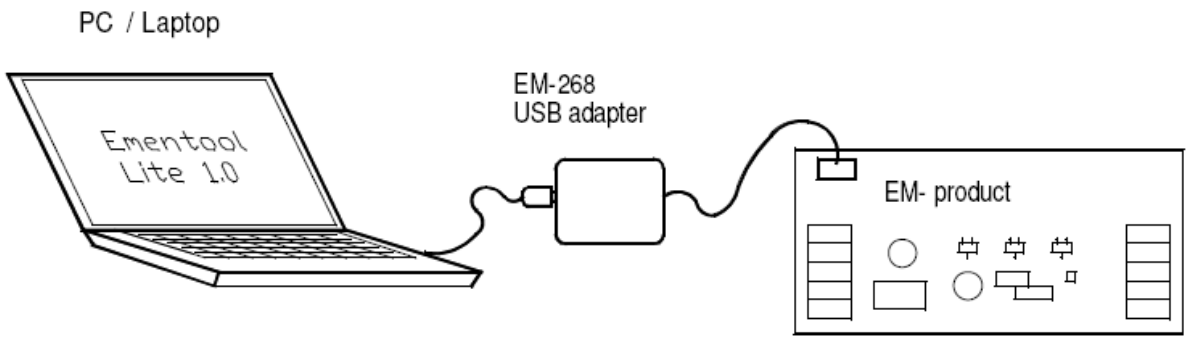

Using
Plug EM-268 USB-adapter to the computer and connect the adapter's red connector to the target device's red connector. Start the program with an icon on the desktop and the view below should appear to the screen.

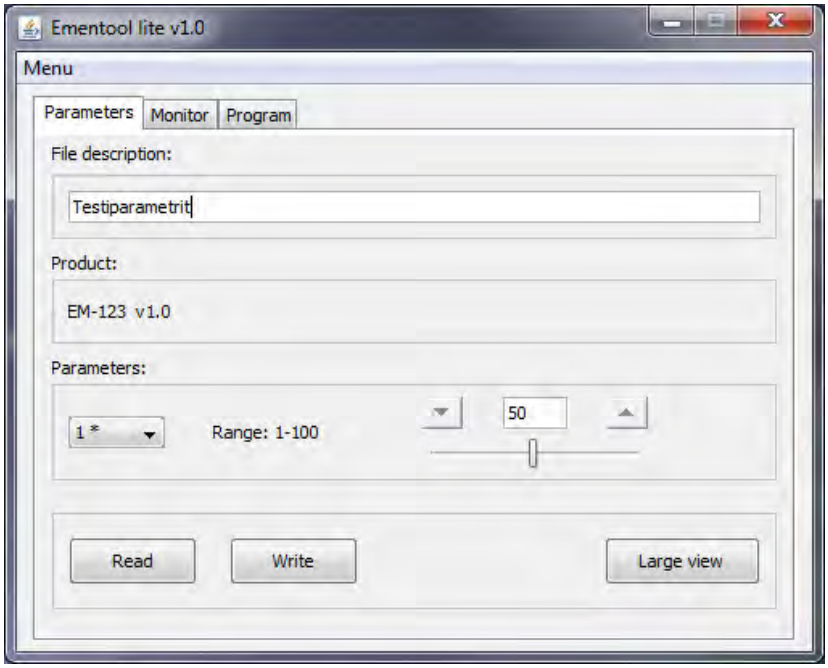

Parameters
After the program has started, a parameter setting view will open. By pressing read, the parameters are read from the the target device and the connected device's tag will appear on the "Product" field. "Write" will save the parameters to the target device's memory. In the basic view, you can only set one parameter at a time by choosing the adjustable parameter from the menu.
In the "Large view" the parameters can be set in groups of 12 units. Parameters can be printed by selecting "Print" from the menu and saved to computer by selecting "Save file as". When saving the file you can use the "File description" field to add additional information about the saved parameters.

Monitoring
By choosing the Monitor-tab, there can be select values for monitoring. The values are drawn as curves on the printing area. The traceable value is selected from the menu and tracking begins by selecting Start. Several values can be tracked simultaneously by choosing "Locked" and moving on to the next value. Drawing area's scale can be automated by selecting "Auto" or the area can be manually scaled by writing the scale values on the boxes in the screen's lower edge.
For a more accurate examination, the curve's drawing can be stopped by pressing stop and then the values can be examined accurately with a pointer. By clicking the mouse in the drawing area the pointer will appear on the curve and follows mouse movements. By pressing again the pointer will be locked. By right clicking the mouse, the pointer will be removed.

Program update
The program-tab is used to update the target device. Save the update file (file extension .epg) to Ementool lite's folder, c:\ementoolLite\epg. Open the update file by selecting "Select prog". The update file's name, version and date will appear on the title field. Start updating by selecting "Program". Once the update has begun it cannot be interrupted. During the update it has to be made sure that the card is not plugged off or that the power is not cut off. Otherwise the update may fail and the card can be corrupted. The update is ready when a "Programmed" text will appear on the field.

EM-A1 OPTION CARD FOR SYMMETRIC CONTROL

EM-A1 is a small auxliary PCB. It is designed to change control mode from unipolar to symmetric plus/minus control. This card makes it possible to use various Electromen driver cards with bipolar control.
Card is only to be used with Electromen products which include the header socket for this EM-A1 option card.

Also a symmetric potentiometer control is possible with EM-A1, as EM-A1 can supply negative voltage (-5V) for potentiometer. The negative voltage is usually made available from direction input terminal of the base card (option card EM-A1 plugged). Allthough EM-A1 option card uses +-5V as full control scale, the different base cards can have possibilities for even wider control input ranges like +-10V or even +-30V. The base cards input scale adjustment trimmer (attenuation) can then be used for adjusting the control scale to be suitable for the application.

Technical data

Supply 5-6Vdc
Current consumption max 10mA
Input inpedance 1Mohm
Input voltage -5...0...5V
Dead zone ± 20mV (stop area)
Neg. supply output -5V (5mA max)
operating temp. -40...70°C

Can be used with products:

EM-151A
EM-176A
EM-206
EM-282

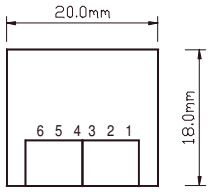

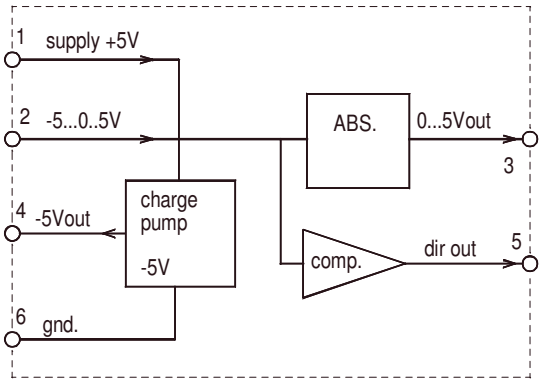

Using examples

EM-176 "standard"
no option card

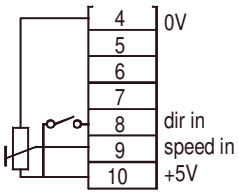

EM-176 "with EM-A1"
and potentimeter control

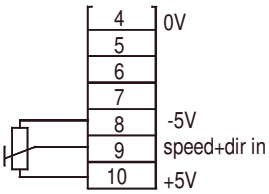

"stop" in middle position

EM-176 "with EM-A1"
symmetric voltage control

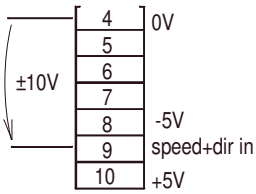

SPECIFICATIONS	CONTRACT NO.	DATE	COMPANY ELECTROMEN OY
	DRAWN BY: K.M.K	9.10.13	
	CHECKED BY: A.J.K	22.10.13	TITLE EM-A1 option converter card
	DESIGNED BY:		SIZE A4 / FSCM NO. / DWG NO. / FILE NAME
	DESIGN ACTIVITY		
	CUSTOMER		SCALE / DATE / SHEET 1 of 1

EM-A3-10K CONTROL POTENTIOMETER

EM-A3-10K is a control potentiometer for automation applications. This unit has a resistor element of conductive plastic material, which offers a good long term endurance. Recommended for indoor use, but with O-ring and sealing material it can be protected against dropping water.
Also available with self adhesive dial as an option.

Technical data

Mechanical range 270deg.
Electrical range 240deg.
Slide material: conductive plastic
Nominal resistance 10kohm (20%)
Linearity better than 5%
Shaft diameter 6-6.3mm
Max. voltage 30Vdc
Mounting hole dia. 10mm (panel max 5mm)
Operating temperature -30...70deg.
Dial sticker black / white text
Housing IP 40 (IP65 with O-ring)

Type codes

EM-A3-10K standard (include knob)
EM-A3-10K-A standard + dial sticker
EM-A3-10K-O standard + O-ring
EM-A3-10K-A-O stand. + dial + O-ring

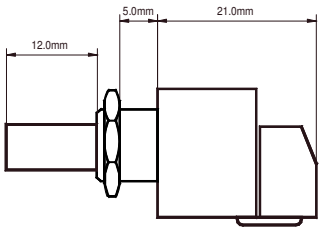

locking nipple

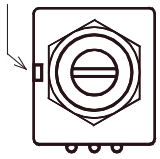

knob.

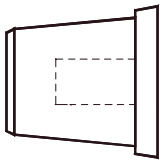

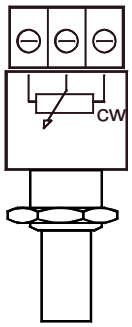

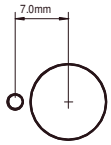

mounting hole
dia. 10mm

locking nipple
hole dia. 2.5mm

IP-65

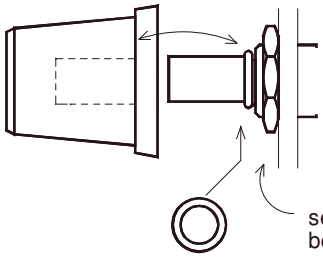

sealing paste in threat and
between panel and nut.

Greased O-ring into shaft
O-ring should be pressed between
potentimeter bushing and bottom of knob.

Dial 0-100

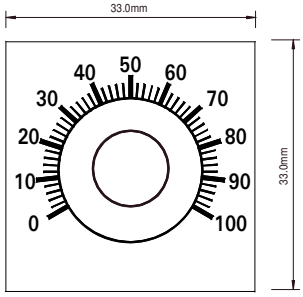

SPECIFICATIONS	CONTRACT NO.	DATE	COMPANY ELECTROMEN OY
	DRAWN BY: K.M.K	9.10.13	
	CHECKED BY: A.J.K	22.10.13	TITLE EM-A3-10K automation potentiometrer
	DESIGNED BY:		SIZE A4 / FSCM NO. / DWG NO. / FILE NAME
	DESIGN ACTIVITY		
	CUSTOMER		SCALE / DATE / SHEET 1 of 1

EM-A18 + EM-A14 REMOTE CONTROL SYSTEM

EM-A18
Motherboard + receiver hybrid EM-A14R

EM-A18 is a low range RF receiver card with two outputs. Receiver is using the “KeeLoq”. coding. The receiver can be learned to work all together with 16 pieces of EM-A14T key-fob transmitters.

LEARNING

Push the learning button on EM-A18 card for 1 second, and then push the transmitters black button for 1 second. Wait about 30 seconds, after that the devices returns to their normal operating mode and are ready to run.

CANCEL LEARNING

Receiver will lose all learning information if learning button is pushed for over 10 seconds.

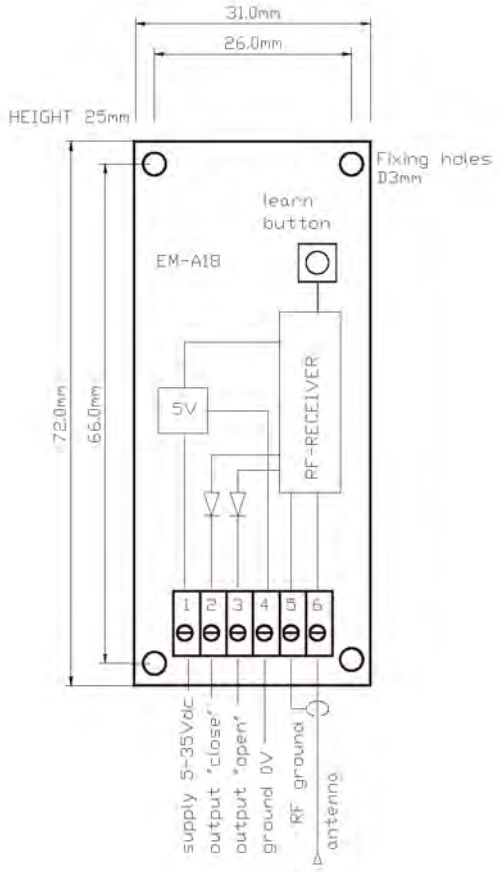

TECHNICAL DATA:

Supply voltage	5-35 V (Vcc)
Current cont.	0,1 mA
Output voltage typ.	Vcc-1 V
Output current max	5 mA
Operating frequency	433 MHz
Antenna,	17 cm wire
Output load	>1 kOhm
Response time	100 ms
Connectors	1 mm^2
Dimensions	31x72x25 mm
Dimensions with EM-KP72-31,25 DIN-rail base	34x80x45mm
EMC-tested for industrial environment	
Weight	35 g
Operating temp (Ta)	-20…60 °C

Manufacturer: Electromen Oy Ltd, Vähäheikkiläntie 56B, 20810 Turku, FINLAND
Tel: +358-2-4693050 Fax: +358-2-4693053 www.electromen.com

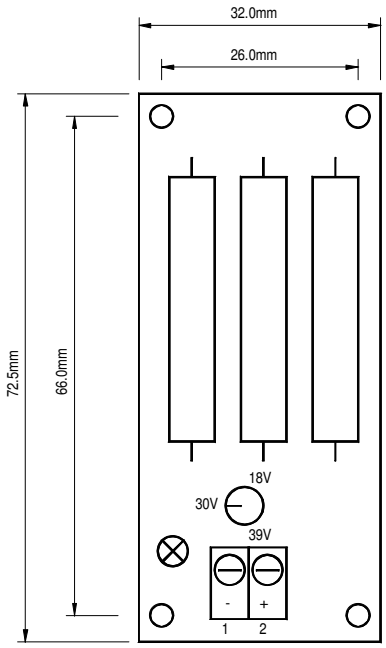

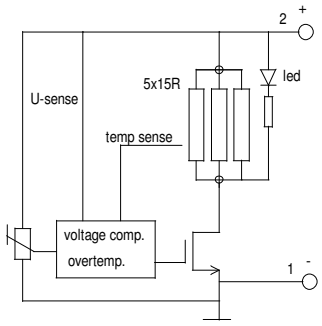

Typical wiring example

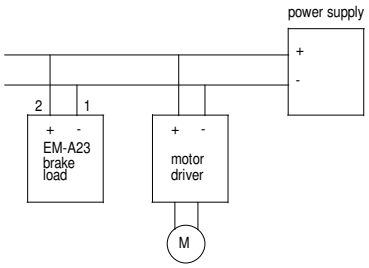

EM-A23 is a braking load for absorbing electric power. When motor slow down it degenerate energy, this energy will increase voltage level. This unit can be set to switch external resistor parallel to supply. Led on board will indicate that resistor is on. Unit has also over temperature protection.

TECHNICAL DATA

Operating voltage 12-40V
Idle current 10mA
Switch on limit 18-39V adjustable
Switch on current 5A at 25V supply
Brake load 5ohm.
Hystersis typ. 10%
Overtemp limit 190 ℃

SPECIFICATIONS	CONTRACT NO.	DATE	COMPANY ELECTROMEN OY
	DRAWN BY: K.M.K	29.11.12	
	CHECKED BY:		TITLE DATASHEET EM-A23 Brake resistor
	DESIGNED BY:		
	DESIGN ACTIVITY		SIZE A4 / FSCM NO. / DWG NO. / FILE NAME a23data
	CUSTOMER		SCALE 1mm = 1mm / DATE / SHEET 1 of 1

HOLES d1.8
MOUNTING WITH 2x2.2mm plastic screws

CONNECTOR HOLE 14-15mm,
-IF NEED TO USE COVER CAP, THEN 14.5mm

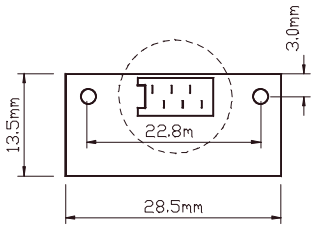

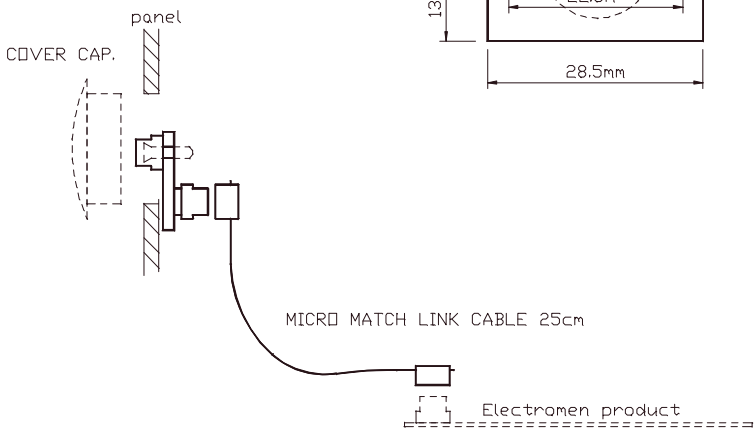

EM-A30 INCLUDED

- MICROMATCH MOUNTED PANEL BOARD
- LINK CABLE MICROMATCH 6 MALE+FEMALE 25CM
- 2x 2.2mm PLASTIC SCREW

- OPTIONALLY 14.5mm COVER CAP.

SPECIFICATIONS	CONTRACT NO.	DATE	COMPANY ELECTROMEN OY		
	DRAWN BY: K.M.K	16.4.16			
	CHECKED BY:		TITLE DATASHEET EM-A30 PANEL MOUNTABLE MICROMATCH LINK CABLE		
	DESIGNED BY:				
	DESIGN ACTIVITY		SIZE A4	FSCM NO.	DWG NO. / FILE NAME A30DATS
	CUSTOMER		SCALE	DATE	SHEET 1 of 1

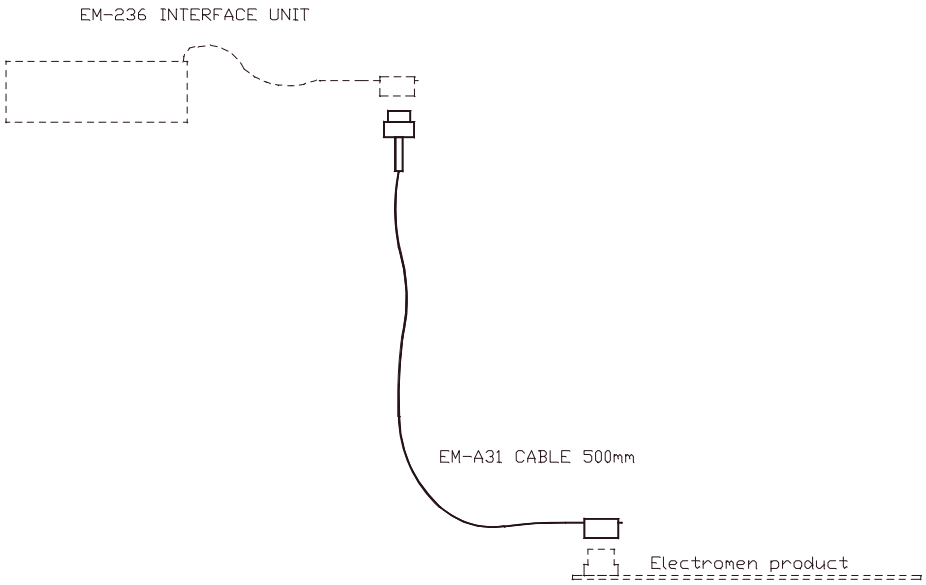

EM-A31 INCLUDED

- MICROMATCH FEMALE STRAIGTH
- MICROMATCH MALE ANGLED
- FLATCABLE 500mm

SPECIFICATIONS	CONTRACT NO.	DATE	COMPANY ELECTROMEN OY		
	DRAWN BY: K.M.K	24.5.16			
	CHECKED BY:		TITLE DATASHEET EM-A31 MICROMATCH EXTENDED CABLE		
	DESIGNED BY:				
	DESIGN ACTIVITY		SIZE A4	FSCM NO.	DWG NO. / FILE NAME A30DATS
	CUSTOMER		SCALE	DATE	SHEET 1 of 1

Rev.1

EM-236 INTERFACE UNIT

FEATURES:

- **Accurate and easy adjustments**
- **Good adjustment repeatability**
- **Saves space in products**
- **Gives economical advance**
- **Enables dynamic monitoring**
- **Easy to use**

EM-236 Interface unit is made for adjusting and copying adjustments of Electromen driver devices and for monitoring dynamic values during drive.
EM-236 enables the searching of the right settings and adjustments for the aplication, and after that these settings can be reliably loaded to other units.
EM-236 is handy in instrumentation and allso a simple tool in production.

The use in short:
After the driver unit is powered the cable from EM-236 with red "Micro Match" connector is connected to the driver unit, (Notice the hole in board for polarity tab). The display of interface unit wakes up and after some anouncements it is ready to load up parameters from the target driver (Load&Edit), if there is need to edit, the values can be changed with + and - buttons. Then the parameters can be saved with 2 seconds push of the "2sec. save" button. If the operation of the driver is OK. the red connector can be connected to the next driver and with a push of "Copy to device" button the same parameters are loaded to the next unit and to as many units as the user desires.

TECHNICAL DATA

Supply	3-6V / 30mA
Baud rate	9600b/s ±10%
Display	2x16digits, LCD
Memory	5 slots, each can store one set of parameters.
Lead lenght	180mm
Measures	90x60x20mm
Weight	100g

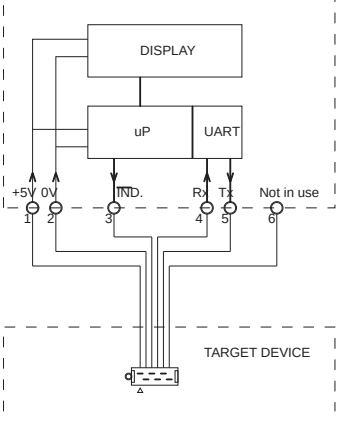

ELECTROMEN Oy Vähäheikkiläntie 56B, 20810 Turku, FINLAND Tel. +358-2-4693050 Fax. +358-2-4693052

FUNCTIONS OF EM-236

Load & Edit
This will pick up the parameters from the driver unit. Parameters will be displayed and you can scroll and edit those with EM-236. After editing a value, it will blink three times before it is valid.
NOTE. Edited parameter list is only in RAM until you save. After saving (pressing 2sec save button) new edited parameters will be sent to driver unit and stocked in to selected memory slotts of the EM-236 Interface unit.

Copy to device
This command will send the parameter list in selected slot in to the driver unit.

Monitor values
This will enable user to monitor some dynamic values during the use of the driver. Monitorable values can be scrolled with arrow -buttons.

Memory
* Show selected
From here you can see the parameter list which is stored in the slot which is selected at the time.
First you get a message, which slot is selected and for what product the parameters are. Then you are displayed the parameters, which you can scroll trough, but not edit until those are saved.
* Select slot
Here you choose which one of the 5 memory slots is active. When you save, copy, or go to "Show selected", the operation is referred to the slot you have chosen here.

SAVING
1. In "Load & Edit" press "2sec save" -button. The displayed parameters (edited or not) will be sent to the driver device and saved to the interface units active slot.
2. "Copy to device" will send the parameters that are in the interface units active slot to the driver device.
3. In all other situations, pressing "2sec save" -button will send the parameters from active slot to driver unit.

NOTE: If you by mistake leave from the "Load & Edit" window with out saving the edited parameters. The edits will stay there if you dont do any saving or copying, or you dont un plug the supply.
To save edited parameters you have to go back to "Load & Edit" and push "2sec save" button. Then the edited parameters are saved to active slot and sent to the driver device.

START UP
Interface unit is started up by connecting it to a powered driver unit.

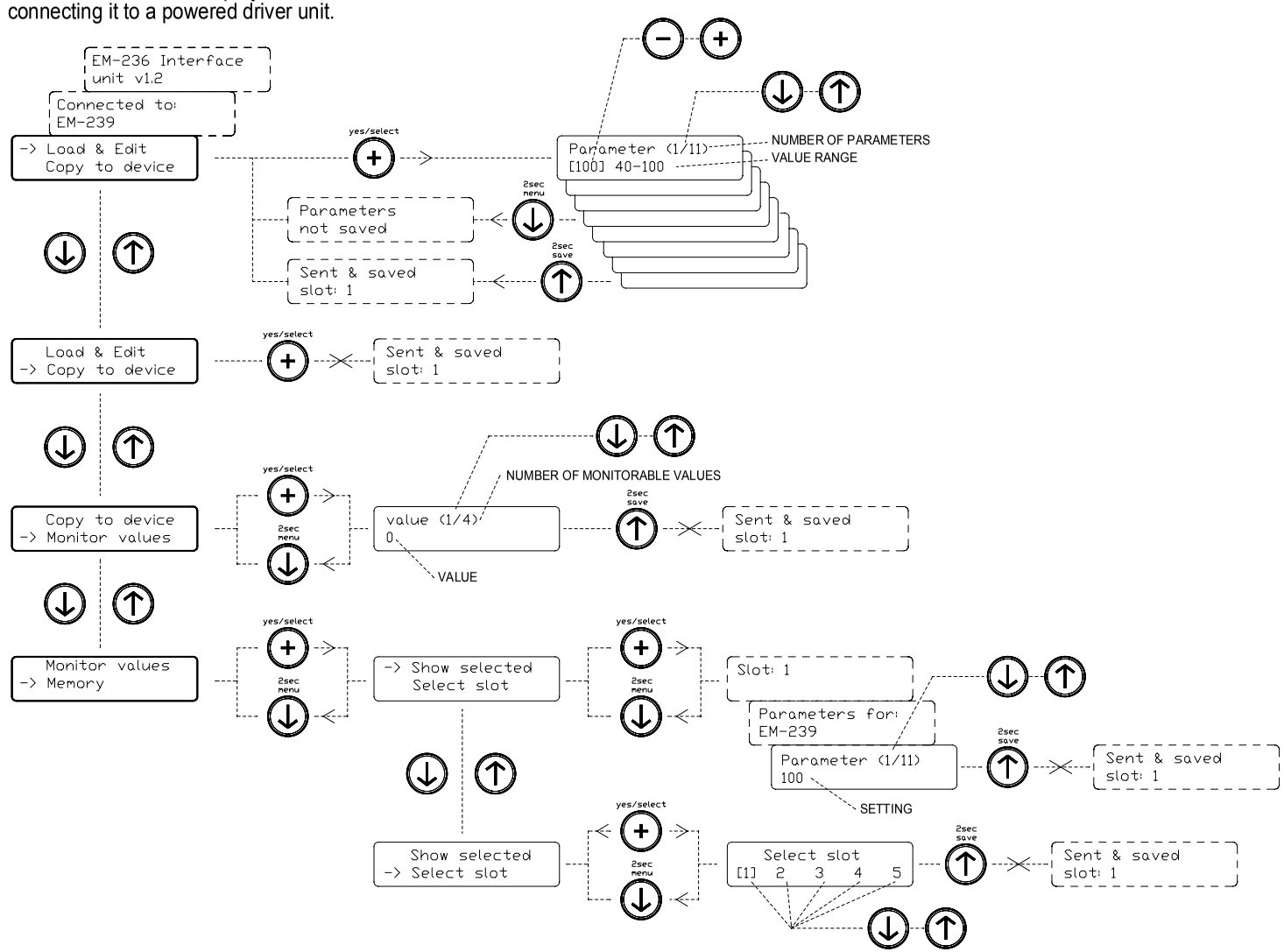

Fig.1. The menu map of EM-236 Interface Unit.
Note. This unit is for parameter setting of various products, but in examples we have used the code EM-239 for target device.

METAL ENCLOSURES FOR EM-PRODUCTS

GENERAL FEATURES

- Metal sheet enclosure IP20
- Powder painted - black mat.
- Usable with several EM-products
- Card fasteners included

These enclosures are designed to be used with EM- printed board products. The body material is 0.75-1mm sheet metal.
The protection class is typically IP20. Boxes are painted with black semi mat powder paint.
Custom colours available in larger order quantities. The units can be assembled into boxes with included snap-fit fasterners or screws.

BOXES

EM-T5 140x115x50mm outlets 3/3xDG9 for EM-115

EM-T15 95x49x33mm outlets 4xDG9 for EM-165, EM-180, EM-176, EM-213, and EM-241

EM-T17 95x70x33mm outlets 6xDG9 for EM-143s, EM-174 and EM-176

EM-T18 95X95X40mm outlet 6xDG9 for EM-101, EM-106A, EM-136 and EM-239

DG outlet for cable diameters from 2 to 8mm

br-muoko 13.10.2011

PLASTIC ENCLOSURES FOR EM-PRODUCTS

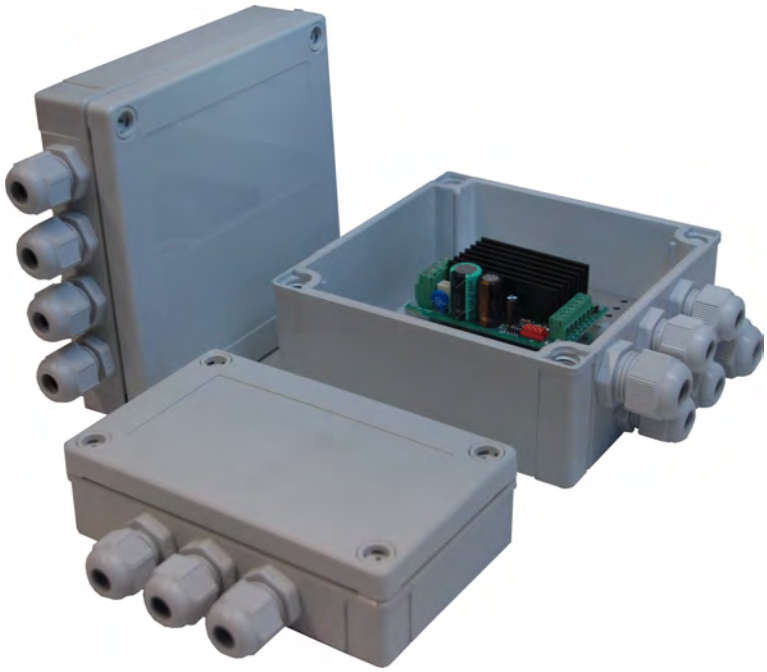

GENERAL FEATURES

- Material Polycarbonate or ABS
- Protection class IP65
- Mounting plate available
- Indoor or outdoor use

These housings can be used with several EM-products. These housings offer protection class of IP65, and are based on FIBOX MNX series. Material is mostly PC (polycarbonate) but ABS is also an option.
PC is suitable for indoor and outdoor use, as ABS is recommended only for indoor use. Some cards can be installed directly to housing but some products require a mounting plate for assembly.
We have also available some pre drilled mounting plates.

HOUSINGS

EM-T19 PC 130x80x35mm, outlets 3xPG9

EM-T20 PC 130x130x35mm, outlets 4xPG9

EM-T27 PC 130x130x60mm, outlets 2xPG11 + 4xPG (mounting plate T33)

EM-T18 ABS 130x130x60mm outlets 3xPG11

EM-T37 PC 180x130x60mm outlets PG11 + 9xPG9

PG9 for cables with diameter 3 - 7mm
PG11 for cables with diameter 4 - 9mm

NOTICE! When card is installed in a plastic box, the continuous power rating will decrease.
This because the cooling of the card is not as effective as in free air.

EM-RAIL BASES

FOR ELECTROMEN PRODUCTS

FEATURES

- Ready made
- Right size for each product
- Fits to 35 mm DIN-rail and C-rail
- Fast installation to rail
- Easy access to adjustments
- Easy access to connectors
- Two widths 72 mm and 108 mm

Electromen keeps also a stock of ready made rail bases for DC-motor drivers, controllers and speed regulators. Most of the Electromen stock products which don´t have their own housing has been designed to fit into a rail housing. With the rail base these products can be installed into control cabinets or wall enclosures that are commonly used in industry and process automation.

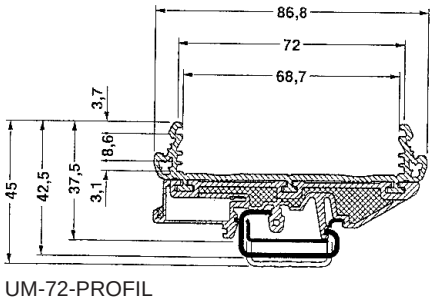

UM-72-PROFIL

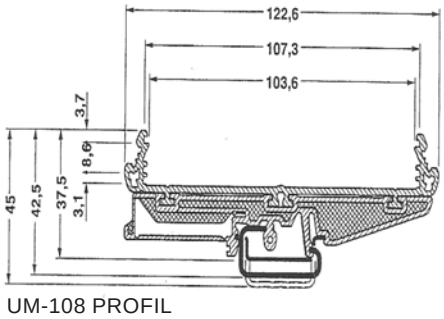

UM-108 PROFIL

ITEM-NUMBER	PRODUCT DESCRIPTION		APPLICABILITY						
EM-KP72-32	RAIL MOUNTING BASE 72x32		EM-165						
EM-KP72-43	RAIL MOUNTING BASE 72x43		EM-124	EM-140	EM-159	EM-175	EM-180		
EM-KP72-65	RAIL MOUNTING BASE 72x65		EM-67	EM-121	EM-143S	EM-172	EM-174	EM-176	
EM-KP72-87	RAIL MOUNTING BASE 72x87		EM-12A	EM-28	EM-101	EM-101-BI	EM-106	EM-136	EM-160
EM-KP107-38	RAIL MOUNTING BASE 107x38								
EM-KP107-74	RAIL MOUNTING BASE 107x74								
EM-KP107-90	RAIL MOUNTING BASE 107x90		EM-186						
EM-KP107-107	RAIL MOUNTING BASE 107x107		EM-115						

Right base for the product

Notice: Prices are subject to change without any prior notice.

ELECTROMEN Oy Vähäheikkiläntie 56B, 20810 Turku, FINLAND Tel. +358-2-4693050 Fax. +358-2-4693052

BONDY

INDUSTRIAL EQUIPMENT SUPPLIER

Transmission

Handling

Motor & Gear

Vacuum Conveying

Linear

Support

See our products and solutions at

www.bondy.dk

For ordering and questions call (+45) 70 15 14 14